62.002

I : Istruzioni di montaggio
GB : Fitting instruction
D : Montageanleitung
F: Instructions de montage
E: Instrucciones de montaje

made in italy

1

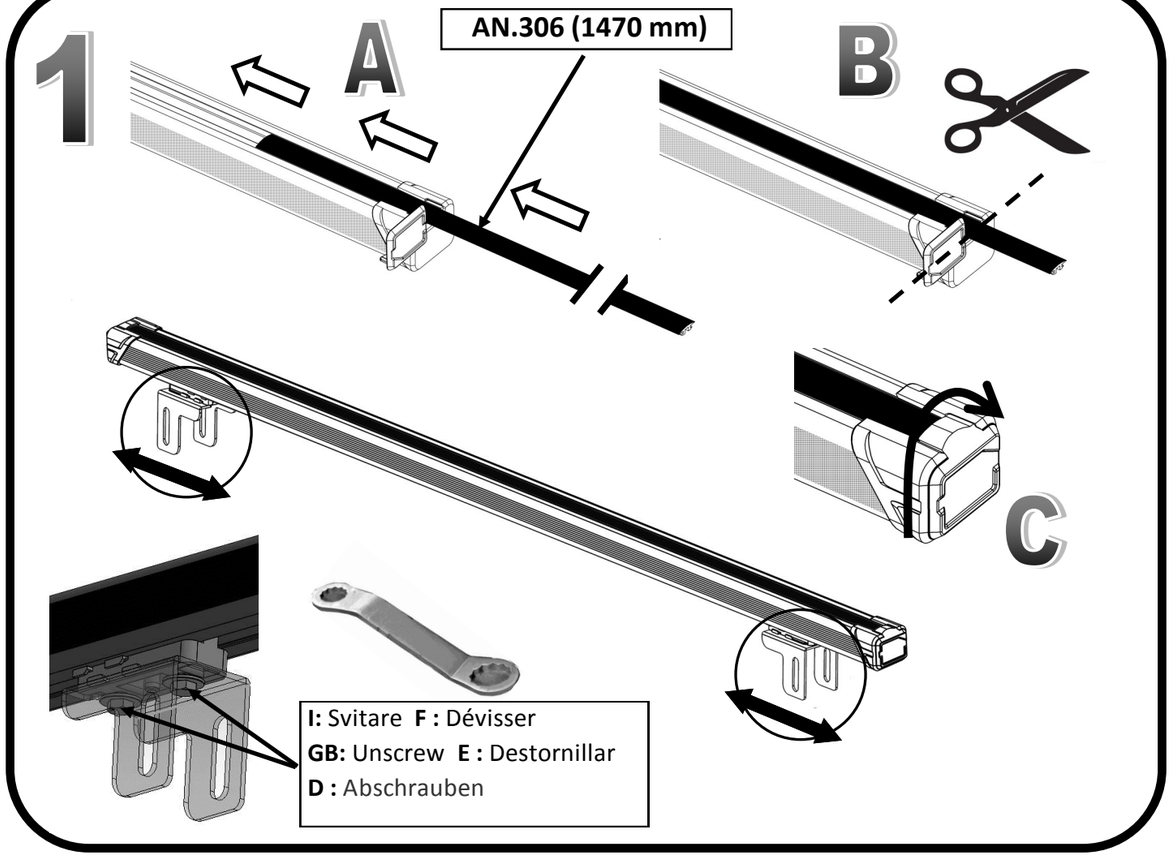

I: Svitare **F :** Dévisser
GB: Unscrew **E :** Destornillar
D : Abschrauben

2

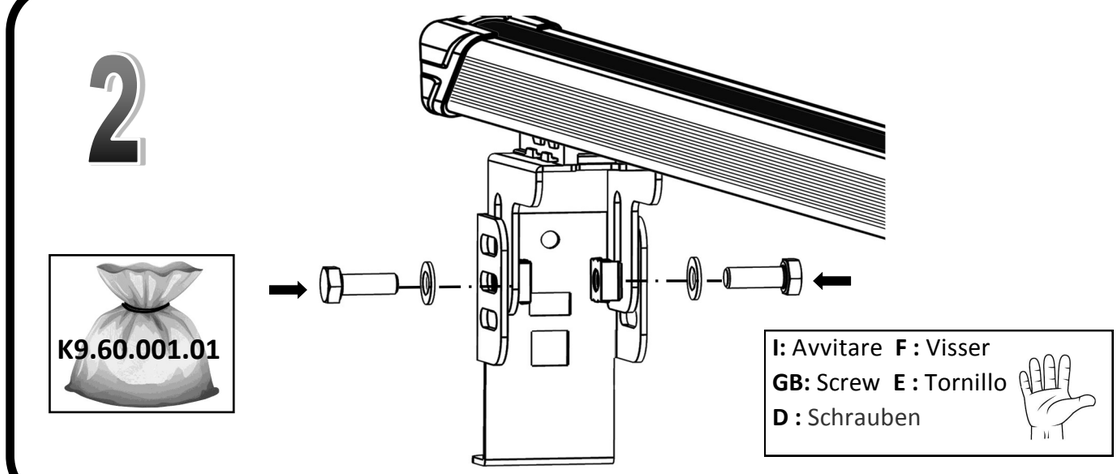

I: Avvitare **F :** Visser
GB: Screw **E :** Tornillo
D : Schrauben

G3 Spa - via S. Allende, n 15
42020 Montecavolo di Quattro Castella
Reggio E: - Italy
Tel ++39 0522 880635
Fax ++39 0522 880306
www.g3spa.it - info@g3spa.it

COD. AO.215
REV. 04

3/A

FIAT: New Doblò no rails (10>) barra centrale.
OPEL: Combo (12>) barra centrale.

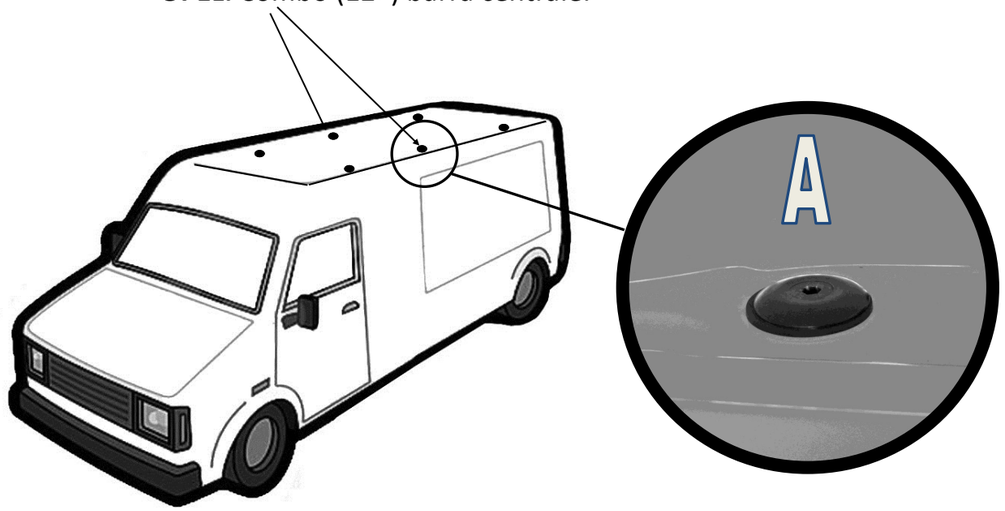

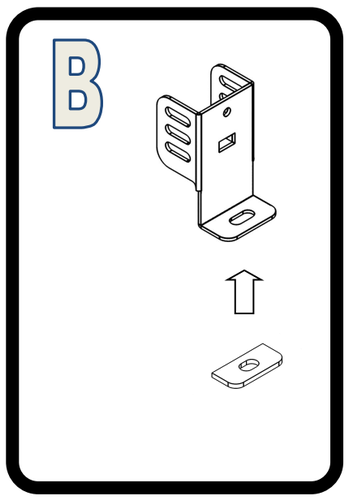

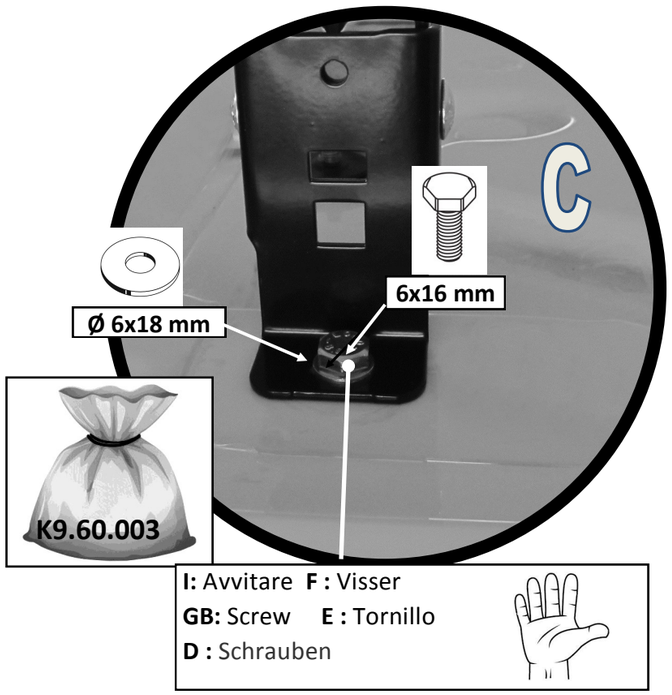

I: Avvitare **F :** Visser
GB: Screw **E :** Tornillo
D : Schrauben



K9.60.001.01 :



(x1)
Cod. AG.325

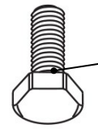

(x4)
6x16 mm / Cod. AG.314

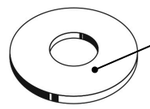

(x4)
Ø6x18 mm / Cod. AG.317



K9.60.060 :



(x2)
Cod. AT.342



(x1)
Cod. AT.316



K9.60.003 :

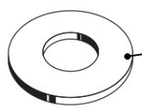

(x2)
Ø6x18 mm / Cod. AG.317



(x2)
Ø6x12 mm / Cod. AG.132

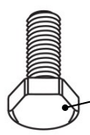

(x2)
6x16 mm / Cod. AG.314

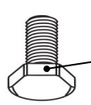

(x2)
6x12 mm / Cod. AG.006



(x2)
Ø8x16 mm / Cod. AG.082

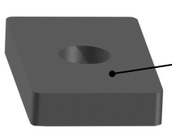

(x2)
Cod. AG.323

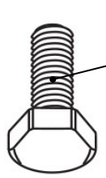

(x2)
8x16 mm / Cod. AG.321

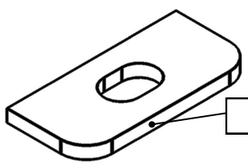

(x2)
Cod. AN.302

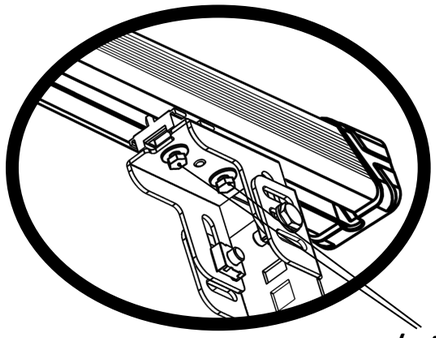

(x4)

6x25 mm / Cod. AG.358

Ø6x18 mm / Cod. AG.317

Cod. AT.441

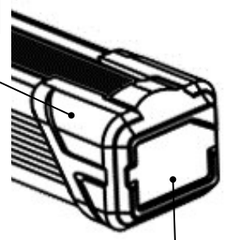

Cod. K60.440G3

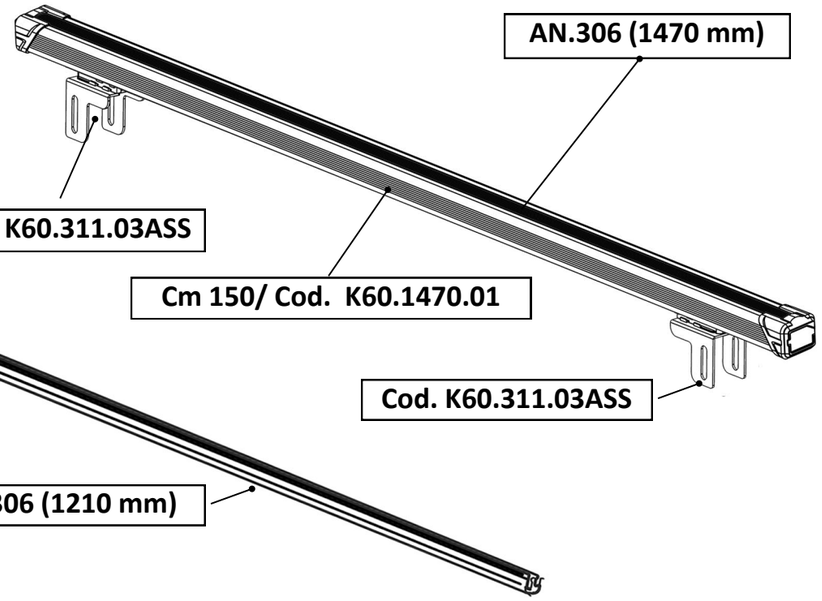

AN.306 (1470 mm)

Cod. K60.311.03ASS

Cm 150/ Cod. K60.1470.01

Cod. K60.311.03ASS

AN.306 (1210 mm)

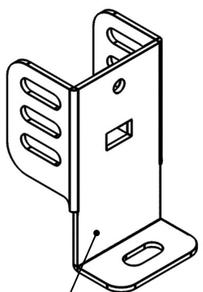

(x2)

Cod. K60.310

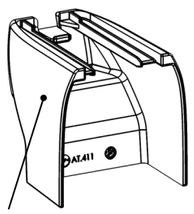

(x2)

Cod. AT.411

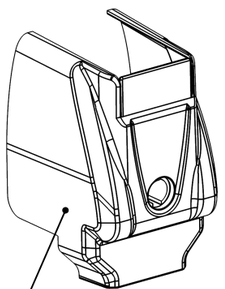

(x2)

Cod. K60.613ASS

3/B

FORD: Custom barra anteriore - centrale - posteriore.

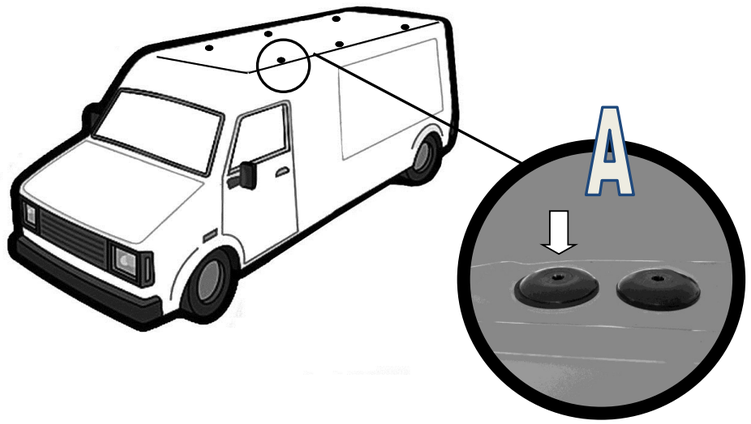

B

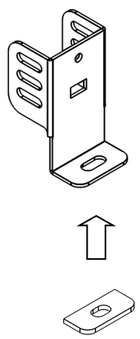

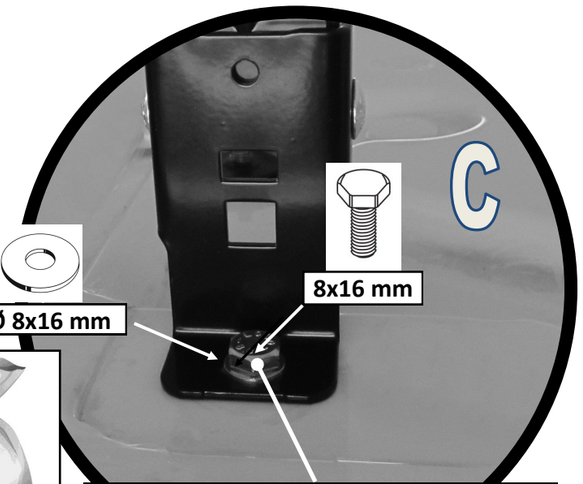

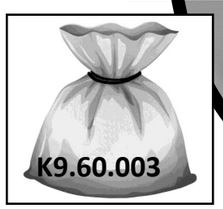

K9.60.003

I: Avvitare **F :** Visser
GB: Screw **E :** Tornillo
D : Schrauben

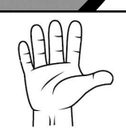

3/C

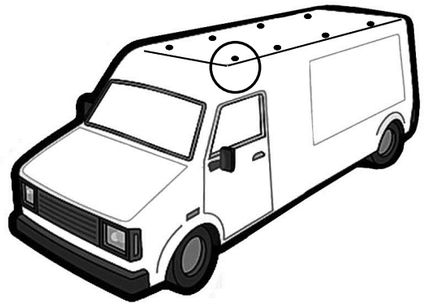

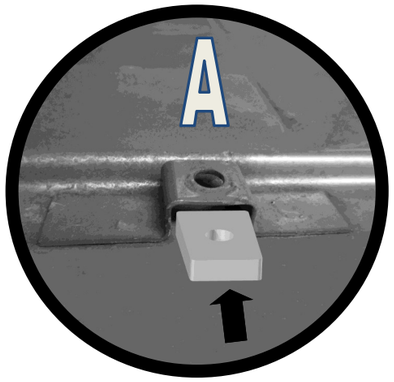

CITROEN: Jumpy (07-15) (16-21) (2022> XS, M, XL)
FIAT: Scudo (07-15) (2022> Base, Maxi)
OPEL: Vivaro (2019> Small, Medium, Large)
PEUGEOT: Expert (07-15)(16-21) (2022> Compact, Standard, Long)
TOYOTA: Proace(2021> Medium, Long)

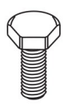

CITROEN: Jumpy (07-15) **= 6x12 mm**
CITROEN: Jumpy (16-21) (2022> XS, M, XL) **= 6x16 mm**
FIAT: Scudo (07-15) **= 6x12 mm**
FIAT: Scudo (2022> Base, Maxi) **= 6x16 mm**
OPEL: Vivaro (2019> Small, Medium, Large) **= 6x16 mm**
PEUGEOT: Expert (07-15) **= 6x12 mm**
PEUGEOT: Expert (16-21) (2022> Compact, Standard, Long) **= 6x16 mm**
TOYOTA: Proace(2021> Medium, Long) **= 6x16 mm**

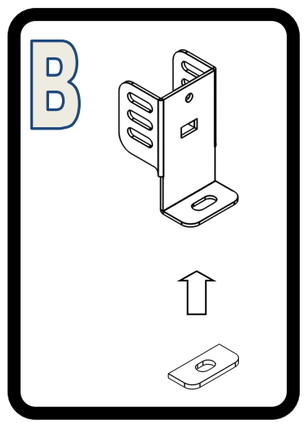

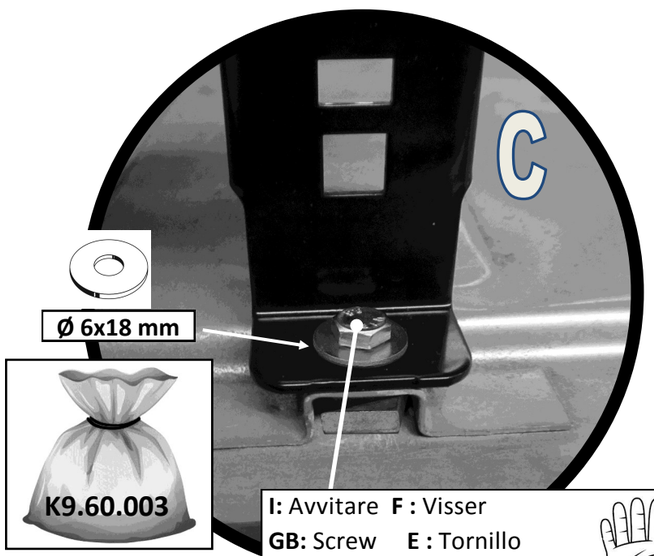

I: Avvitare **F :** Visser
GB: Screw **E :** Tornillo
D : Schrauben



10

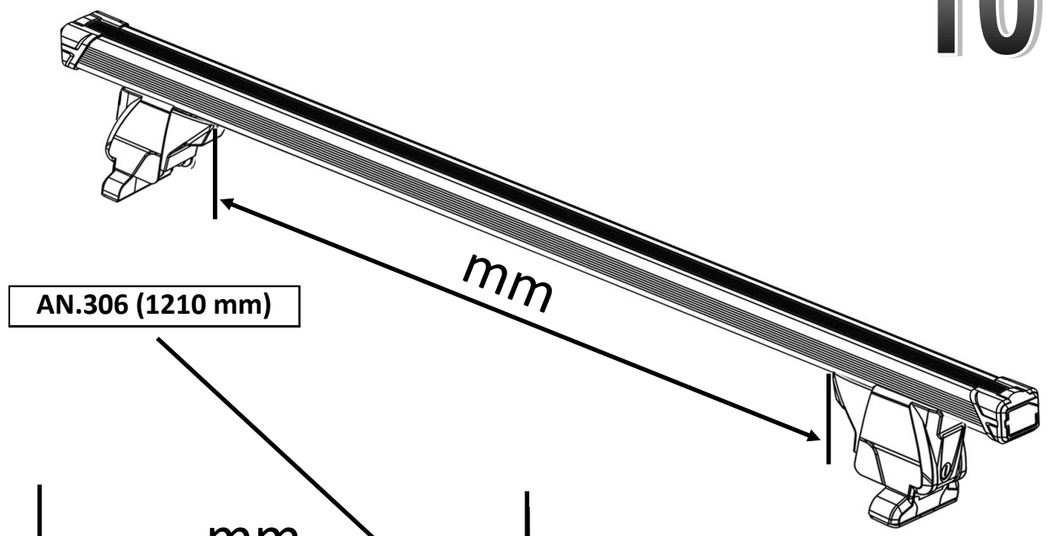

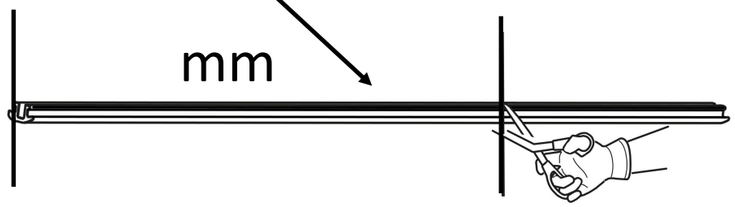

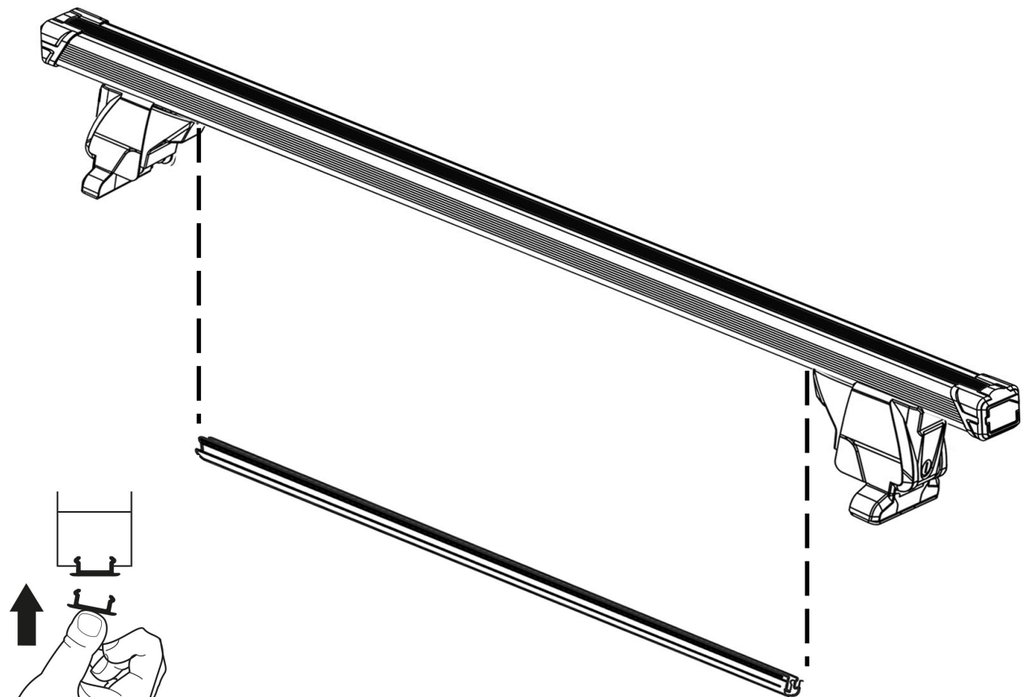

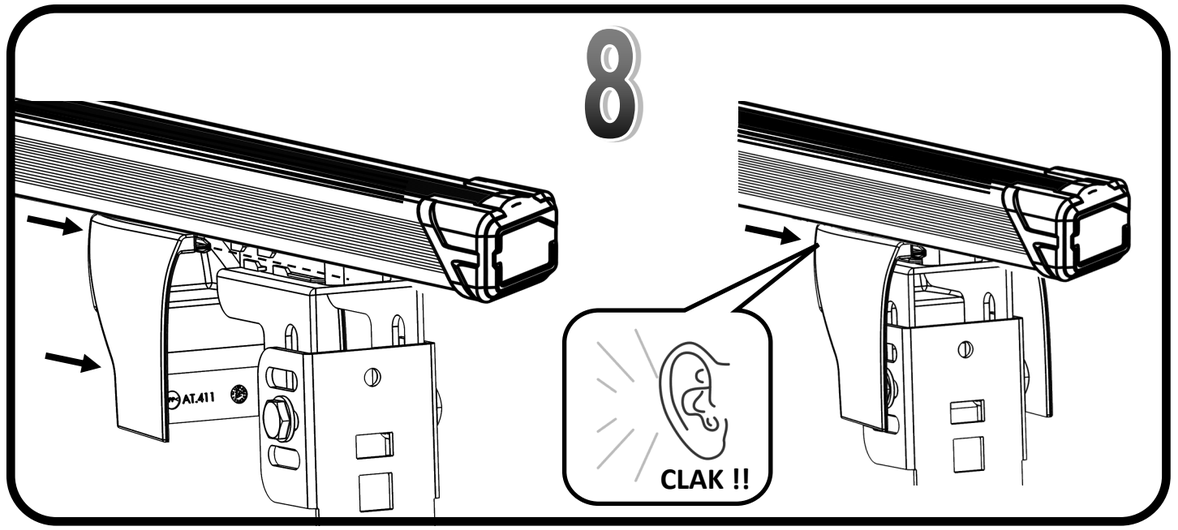
8
AT.411
CLAK !!

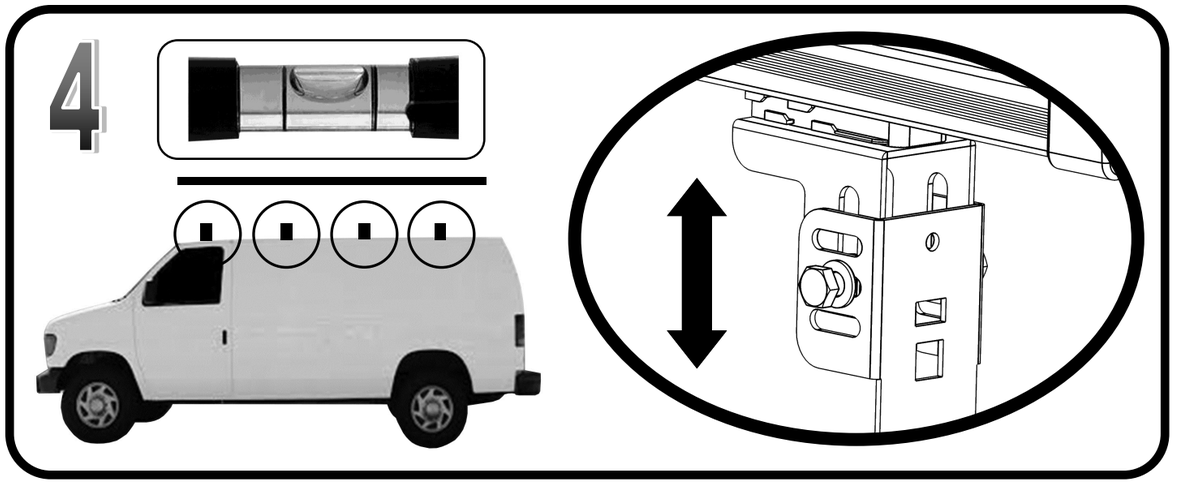
4

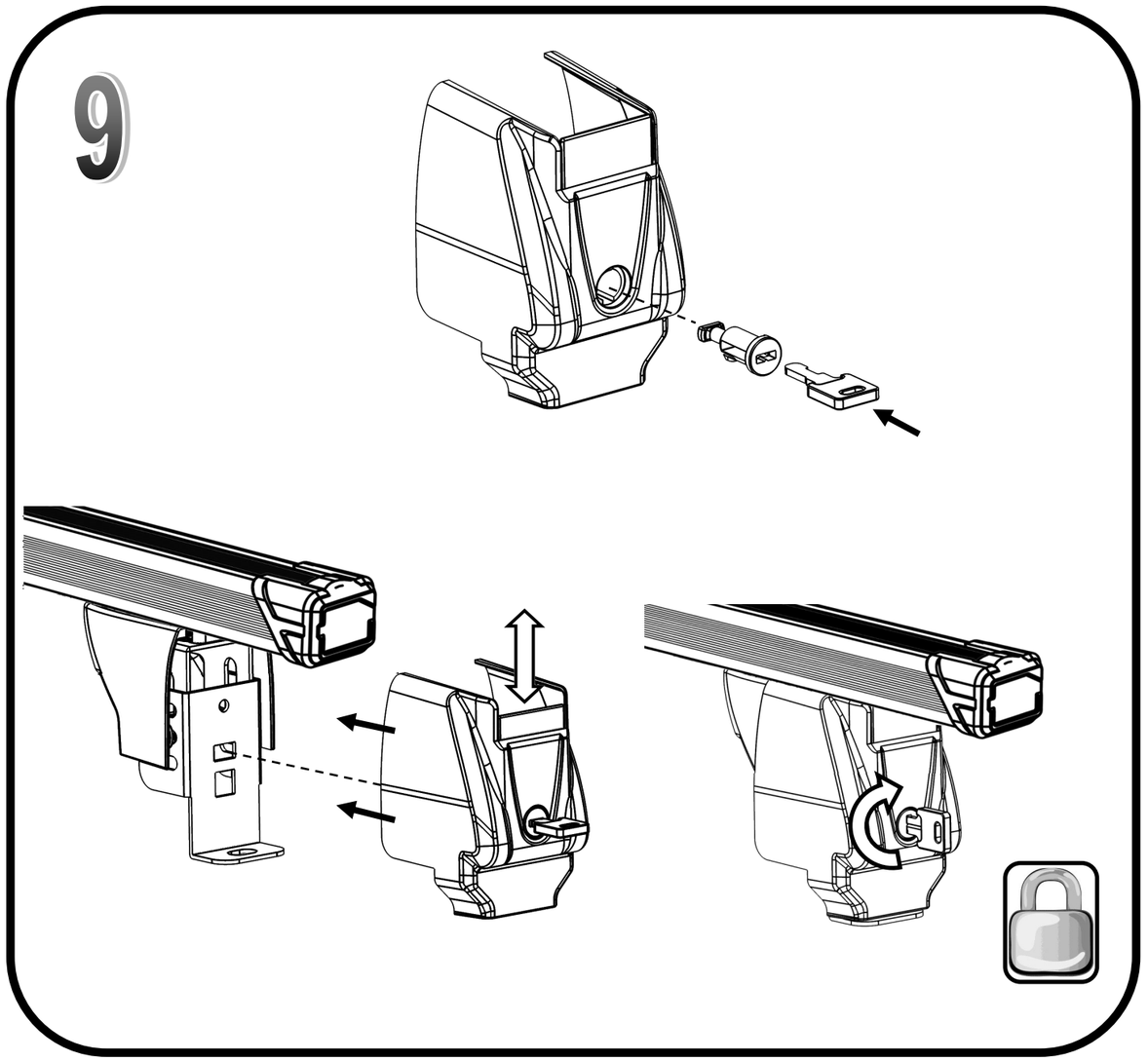
9

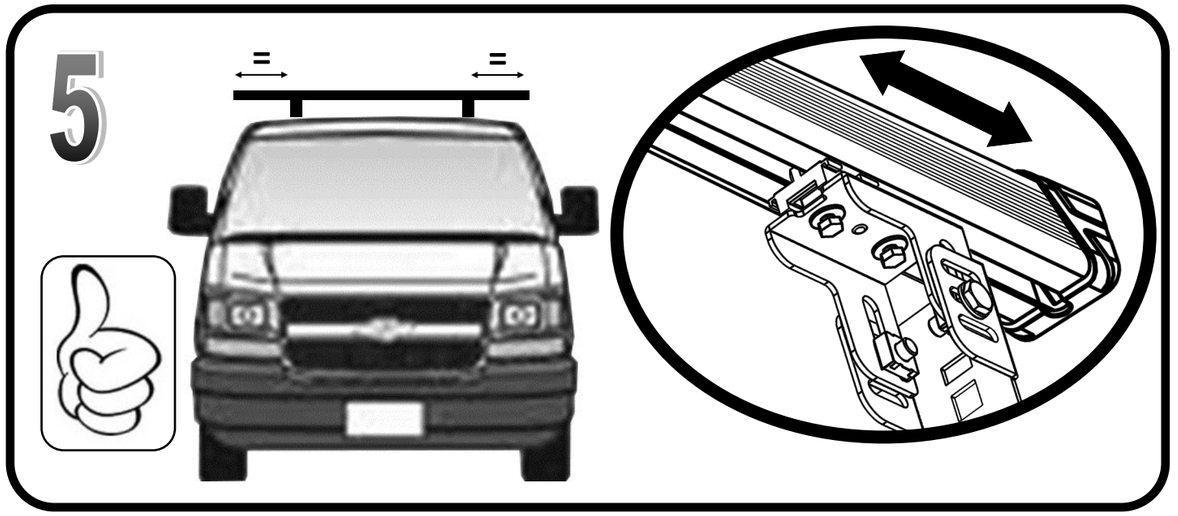
5

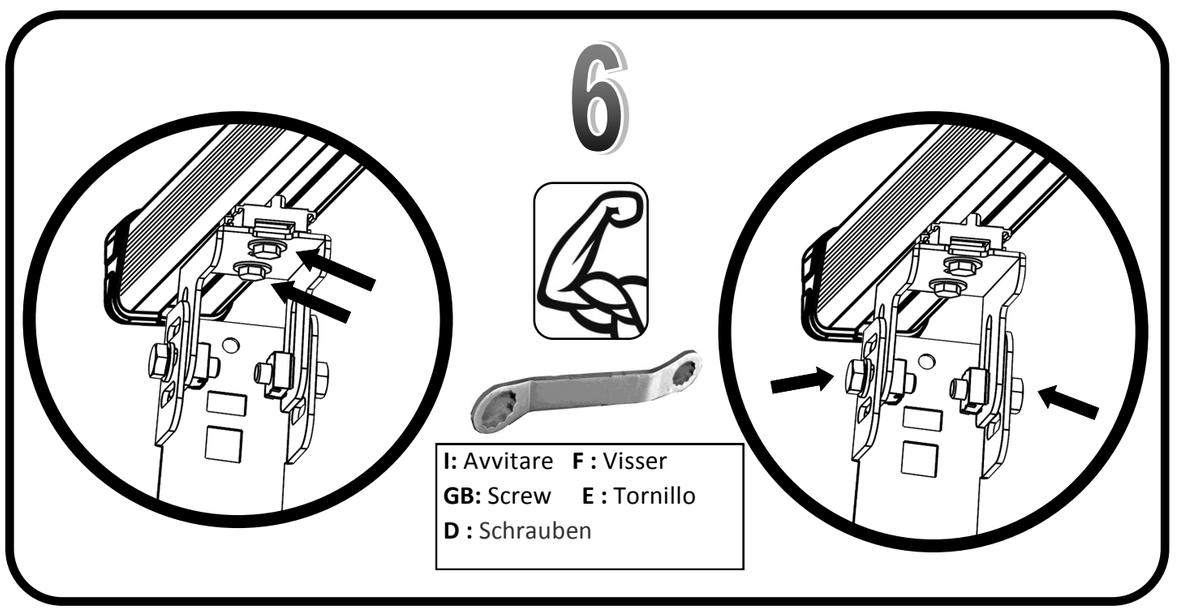
6
I: Avvitare F : Visser
GB: Screw E : Tornillo
D : Schrauben

7/A

FIAT: New Doblò no rails (10>) barra centrale.
OPEL: Combo (12>) barra centrale.



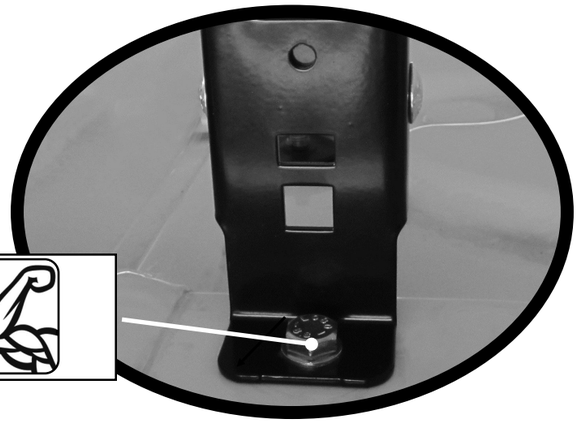

I: Avvitare **F :** Visser
GB: Screw **E :** Tornillo
D : Schrauben

7/B

FORD: Custom barra anteriore - centrale - posteriore.





I: Avvitare **F :** Visser
GB: Screw **E :** Tornillo
D : Schrauben

7/C

CITROEN: Jumpy (07-15) (16-21) (2022> XS, M, XL)
FIAT: Scudo (07-15) (2022> Base, Maxi)
OPEL: Vivaro (2019> Small, Medium, Large)
PEUGEOT: Expert (07-15)(16-21) (2022> Compact, Standard, Long)
TOYOTA: Proace(2021> Medium, Long)

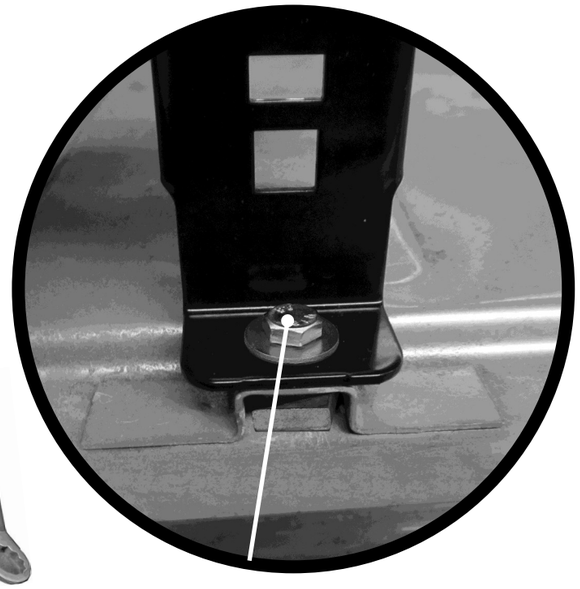



I: Avvitare **F :** Visser
GB: Screw **E :** Tornillo
D : Schrauben