bicube 400+ disassembled

Roof box
Box da tetto

ASSEMBLING INSTRUCTION – ISTRUZIONI D'ASSEMBLAGGIO

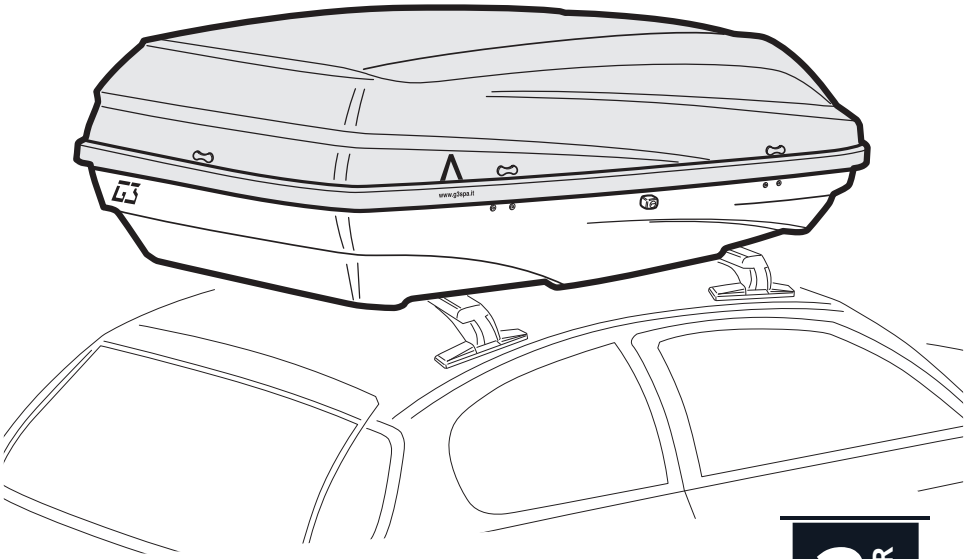

2 YEAR WARRANTY



DUAL SIDE



= 10.4 kg (22.9 lbs)



MAX. = 75 kg (165.34 lbs)



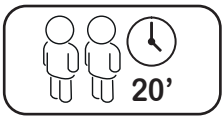

G3 S.p.A.
Via S. Allende, 15
42020 Montecavolo di Quattro Castella (RE) - Italy
Tel +39 0522 880635
Fax +39 0522 880306
E-mail: info@g3spa.it — www.g3spa.it

Cod. AO.512 — 10.2023 Rev. 01 — © G3 S.p.A. - Italy

Roof box
Box da tetto

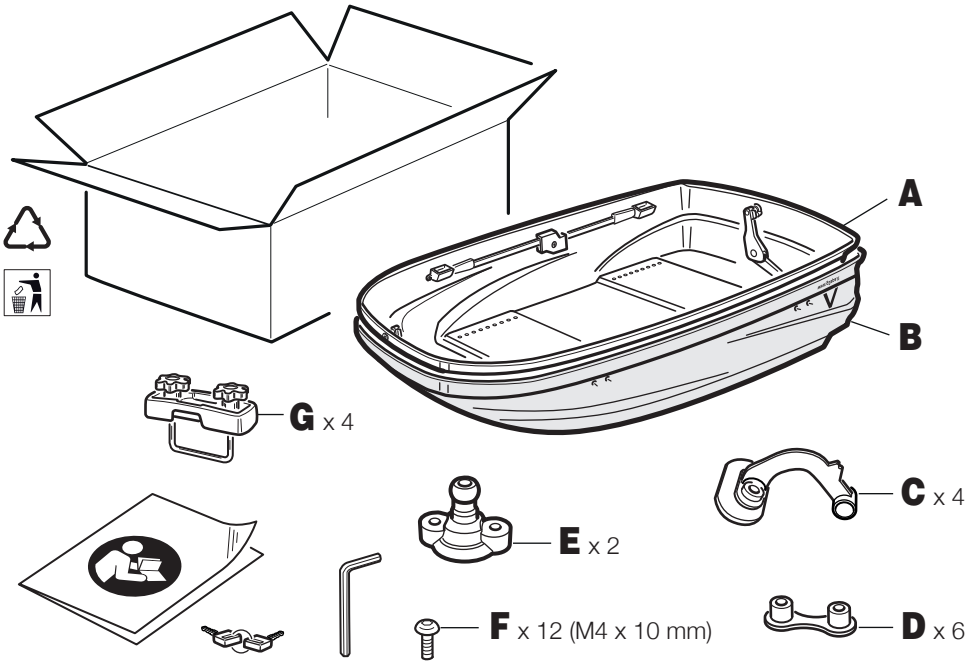

1

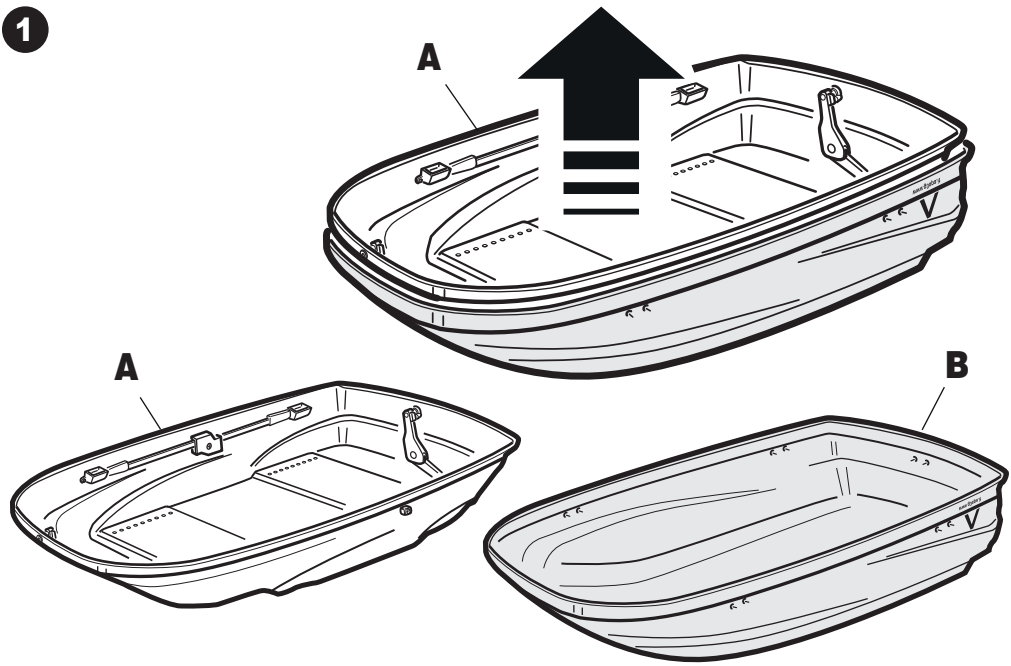

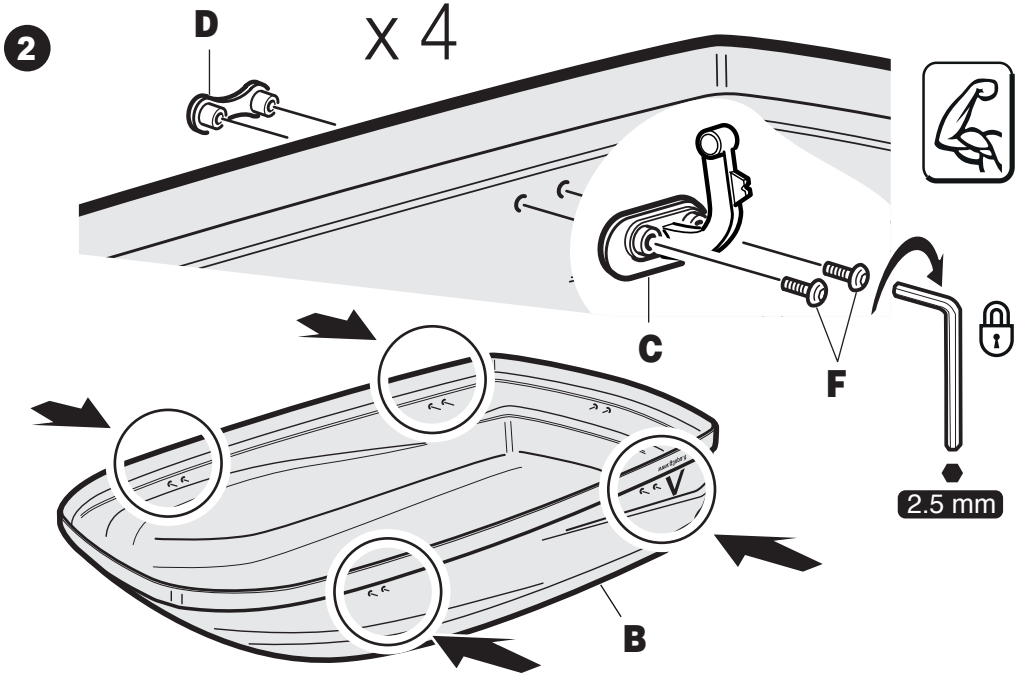
2
D
x 4
C
F
2.5 mm
B

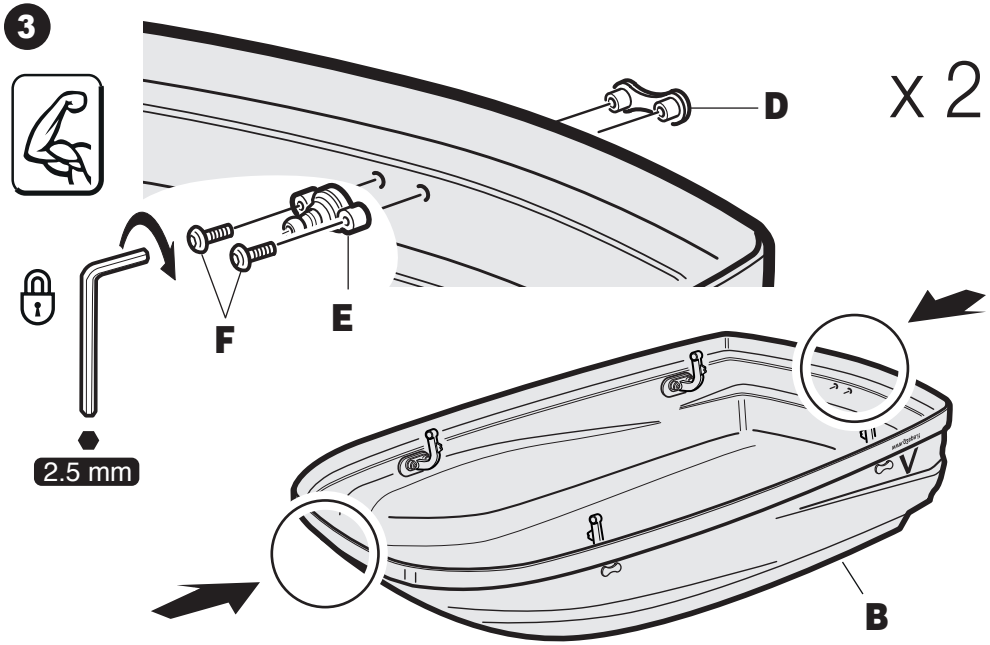
3
D
x 2
F
E
2.5 mm
B

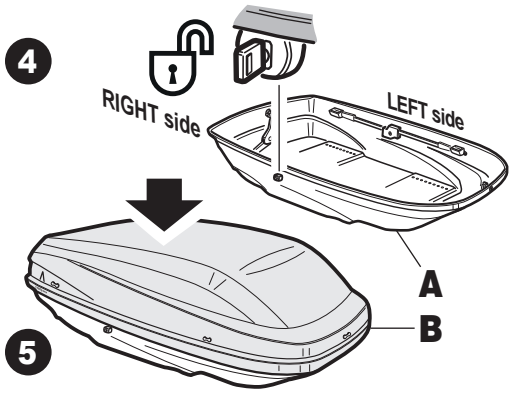

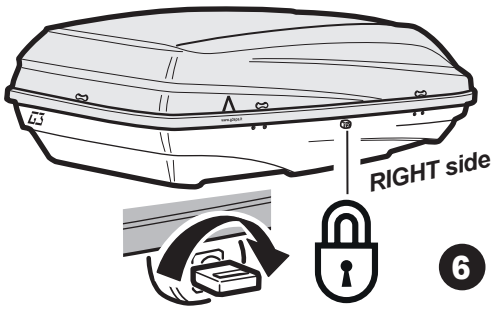

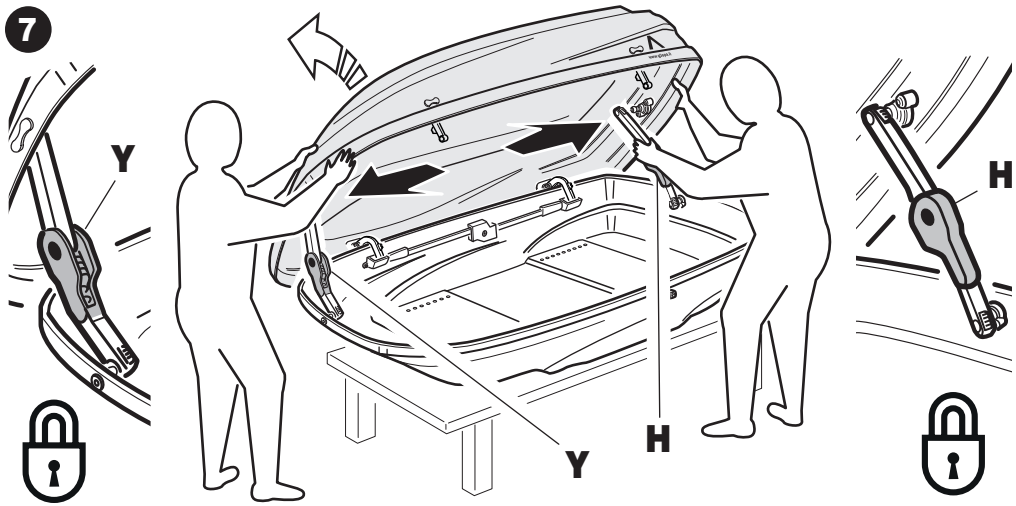

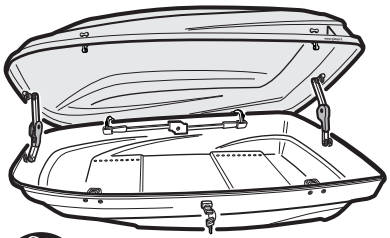









Cod.
AO.100K9009.2

