67.110.009

made in italy

ISTRUZIONI DI MONTAGGIO
FITTING INSTRUCTION

= 15 min.

9

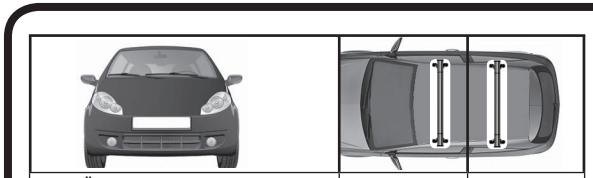

CITROËN Ax 3P (ALL)	F: 350 mm	R: 350 mm
FIAT Panda I 3P (>2002)	F: 350 mm	R: 350 mm
NISSAN Micra 3P (92>03)	F: 350 mm	R: 350 mm
PEUGEOT 205 3P (ALL)	F: 450 mm	R: 200 mm
SEAT Marbella 3P (87>92)	F: 350 mm	R: 350 mm

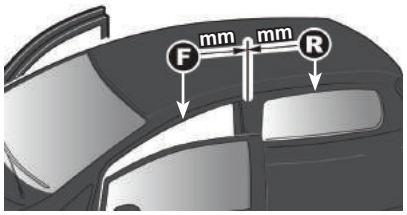

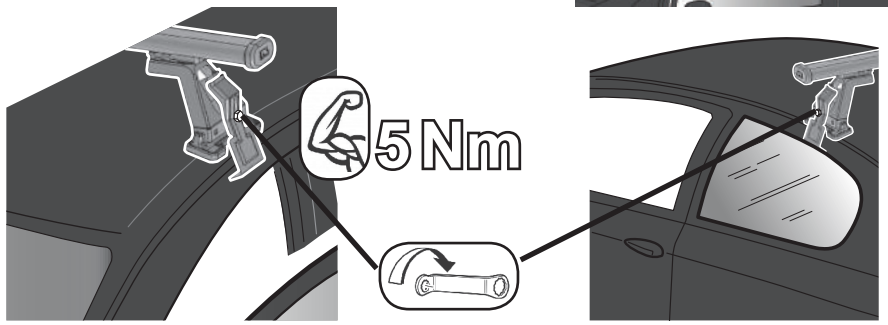

10

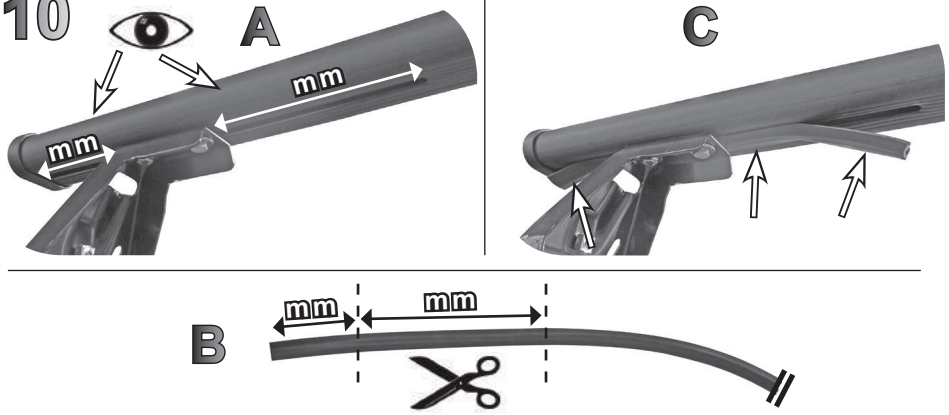



Max 50 Kg

G3 Spa - via S. Allende, n 15
42020 Montecavolo di Quattro Castella
Reggio E. - Italy
Tel ++39 0522 880635
Fax ++39 0522 880306
www.g3spa.it - info@g3spa.it

COD. AO.372

REV. 00

1

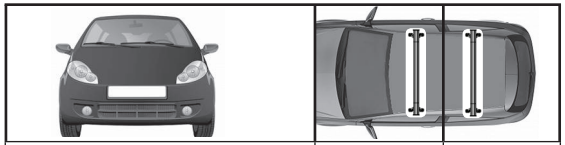

CITROËN Ax 3P (ALL)	153 mm	168 mm
FIAT Panda I 3P (>2002)	113 mm	113 mm
NISSAN Micra 3P (92>03)	163 mm	171 mm
PEUGEOT 106 3P (91>04)	173 mm	186 mm
PEUGEOT 205 3P (ALL)	163 mm	168 mm
SEAT Marbella 3P (87>92)	113 mm	113 mm

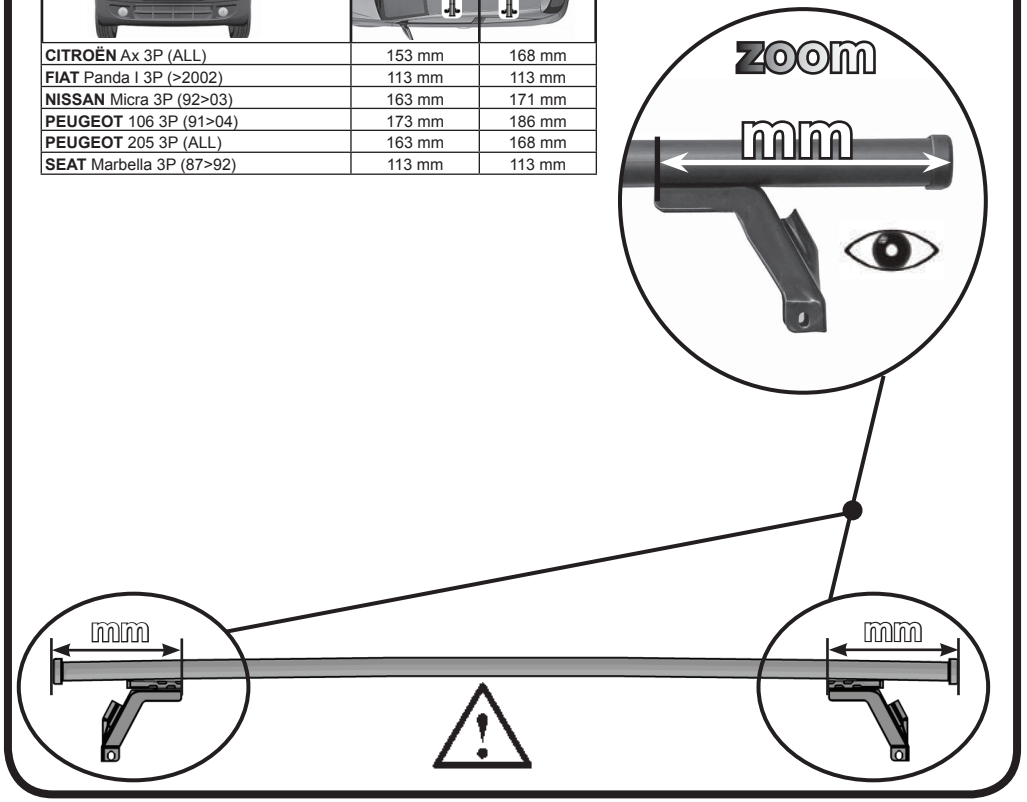

2

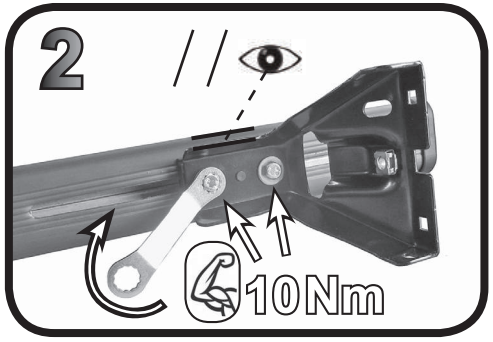

3

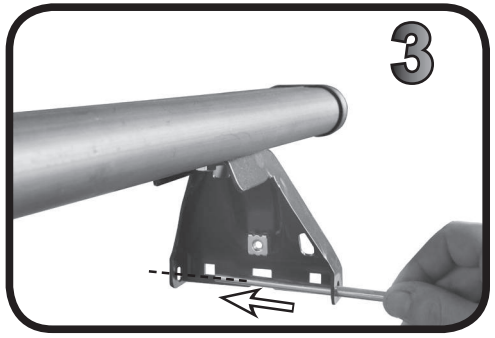

4

A



B





5

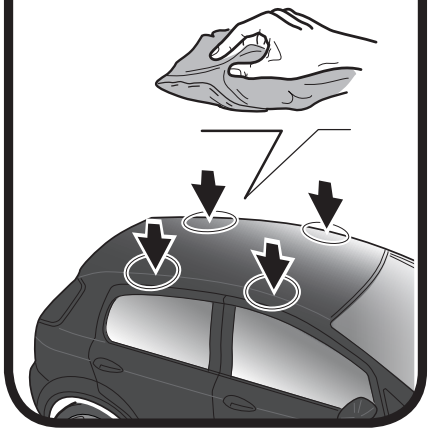

6

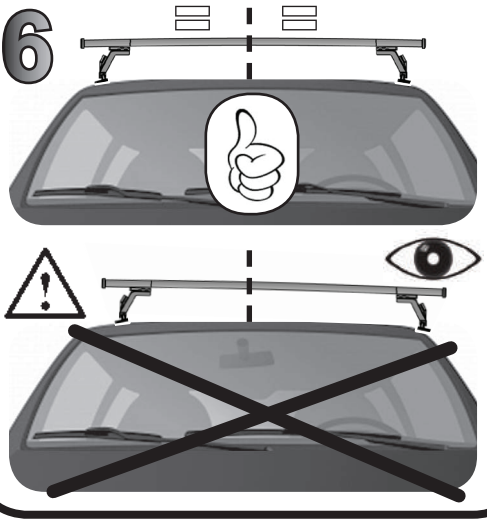

7

CITROËN Ax 3P (ALL)	03	02
FIAT Panda I 3P (>2002)	03	02
NISSAN Micra 3P (92>03)	03	02
PEUGEOT 106 3P (91>04)	03	02
PEUGEOT 205 3P (ALL)	03	02
SEAT Marbella 3P (87>92)	03	02

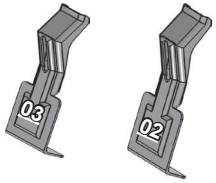

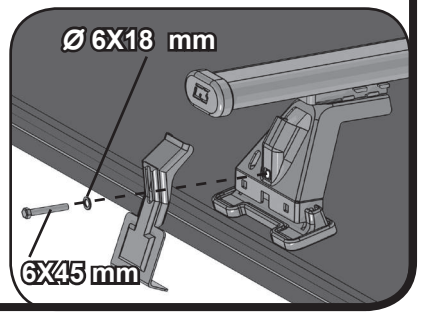

8

PEUGEOT 106 3P (91>04)	F	

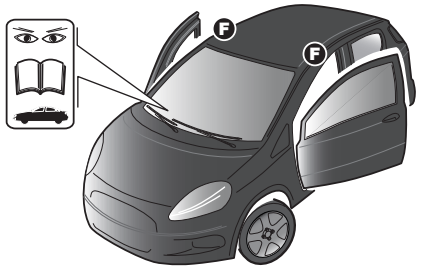

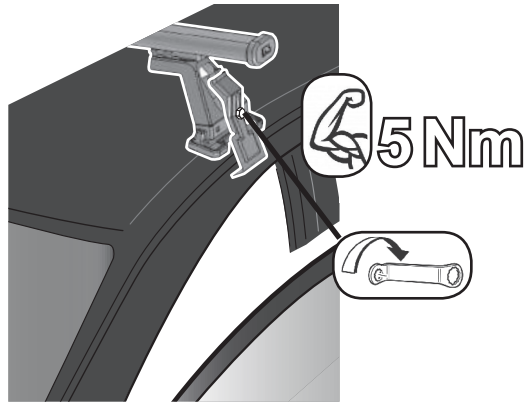

PEUGEOT 106 3P (91>04)		R: 250 mm

