67.110.010

G3 made in italy

ISTRUZIONI DI MONTAGGIO
FITTING INSTRUCTION

= 15 min.

	F	R
AUDI 80 5P (1986>)	F	R
AUDI 100 5P (1991>)	F	R
AUDI A6 4P (>1996)	F	R
HONDA Accord 5P (95-02) (03-08)	F	R
HONDA Civic 5P (01-06)	F	R
HYUNDAI Accent 4-5P (00-06)	F	R
LEXUS CT 5P (2014>)	F	R
ROVER 600 5P (1993>)	F	R
SEAT Arosa 3P (98-05)	F	R
VW Lupo 3P (97-05)	F	R
VW Passat 4P (88-96)	F	R
VW Passat 4P (97-99)	F	R
VW Passat 4P (00-05)	F	R
VW Passat SW 4P (00-05)	F	R

9

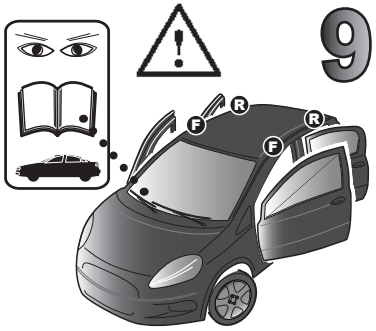

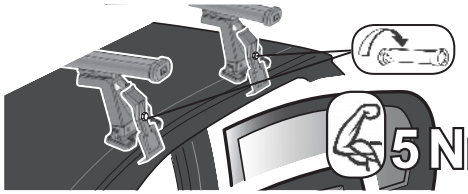

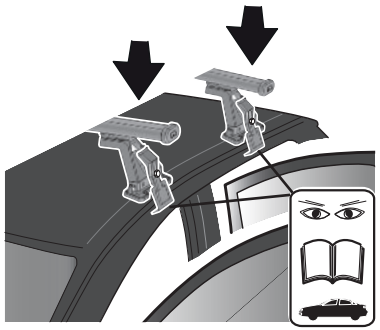

10

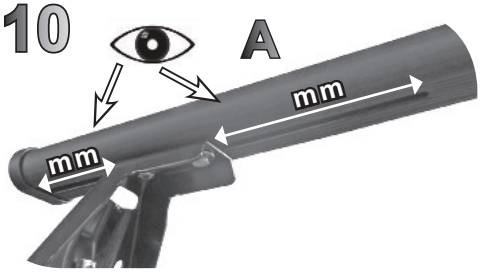

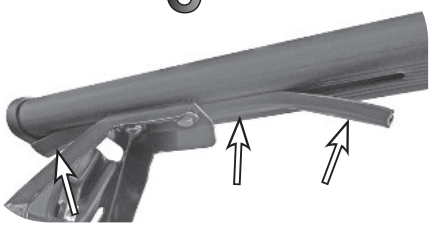

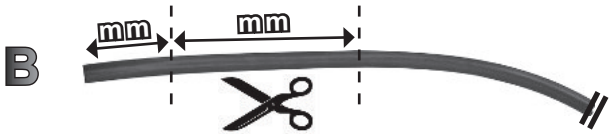





G3 Spa - via S. Allende, n 15
42020 Montecavolo di Quattro Castella
Reggio E.- Italy
Tel ++39 0522 880635
Fax ++39 0522 880306
www.g3spa.it - info@g3spa.it

COD. AO.375

REV. 02

AUDI 80 5P (1986>)	166 mm	177 mm
AUDI 100 5P (1991>)	133 mm	148 mm
AUDI A3 5P (>2002)	133 mm	153 mm
AUDI A6 4P (>1996)	101 mm	113 mm
DAEWOO Evanda 5P (03-06)	147 mm	157 mm
DAEWOO Kalos 5P (2003>)	113 mm	127 mm
DAEWOO Lanos 4-5P (1997>)	152 mm	156 mm
DAEWOO Nubira 4-5P (>2002)	136 mm	141 mm
DAIHATSU Sirion 5P (>2005)	112 mm	123 mm
FORD Fiesta 5P (08-16)	102 mm	113 mm
HONDA Accord 5P (95-02)	136 mm	128 mm
HONDA Civic 5P (01-06)	111 mm	114 mm
HYUNDAI Accent 4-5P (00-06)	131 mm	128 mm
KIA Shuma 5P (1998>)	137 mm	137 mm
LEXUS CT 5P (2014>)	119 mm	119 mm
MERCEDES Classe A 5P (>2004) Passo lungo / Long wheelbase	112 mm	129 mm
ROVER 75 4P (1993>)	183 mm	183 mm
ROVER 600 4P (1993>)	136 mm	131 mm
SEAT Arosa 3P (98-05)	120 mm	144 mm
SUZUKI Alto 5P (02-09)	186 mm	202 mm
VOLVO V40 5P (96-04)	133 mm	153 mm
VOLVO S40 4P (96-04)	141 mm	147 mm
VW Lupo 3P (97-05)	114 mm	138 mm
VW Passat 4P (88-96)	138 mm	163 mm
VW Passat 4P (97-99)	111 mm	111 mm
VW Passat 4P (00-05)	103 mm	100 mm
VW Passat SW 4P (00-05)	103 mm	109 mm

1

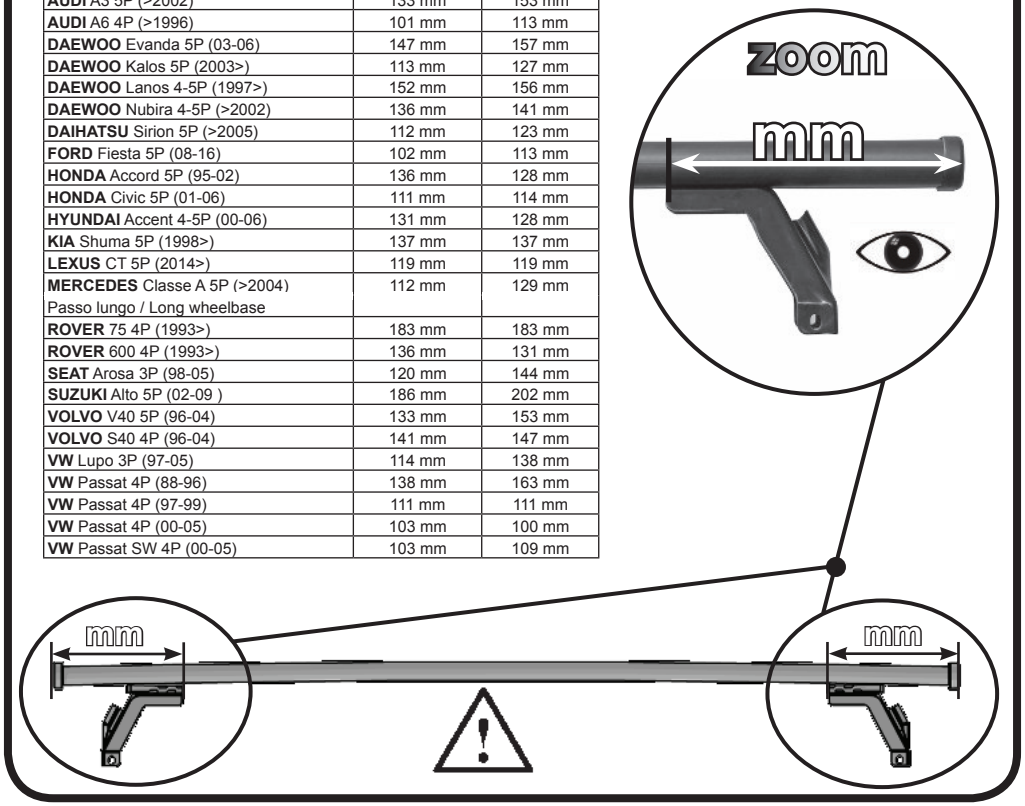

2

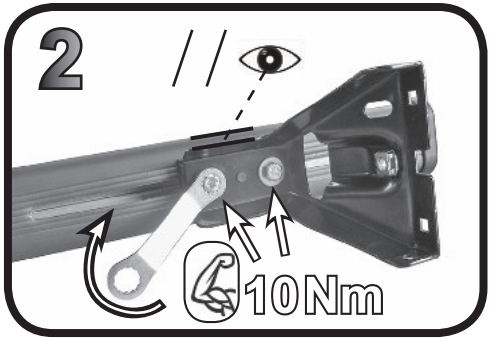

3

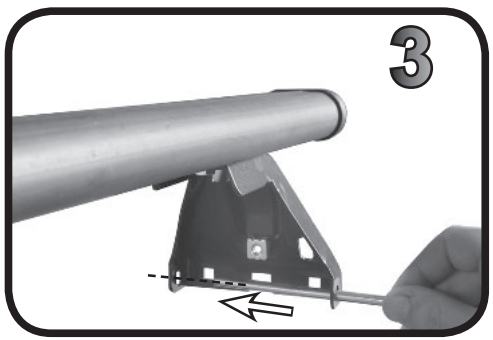

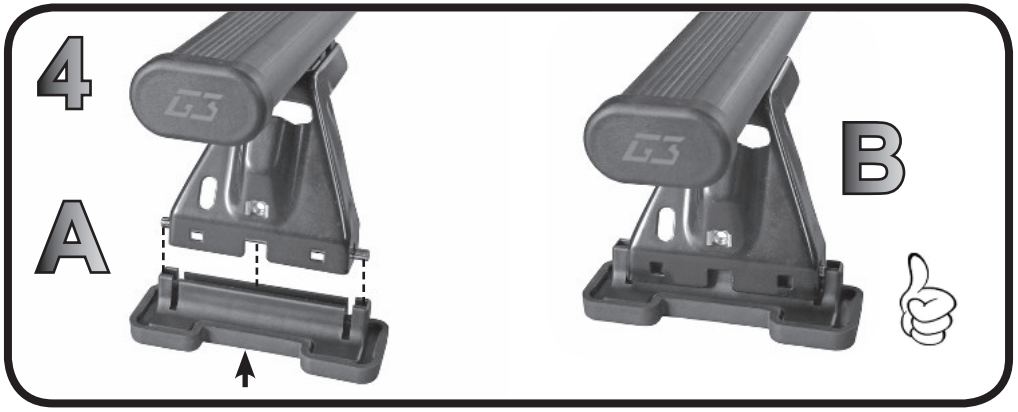

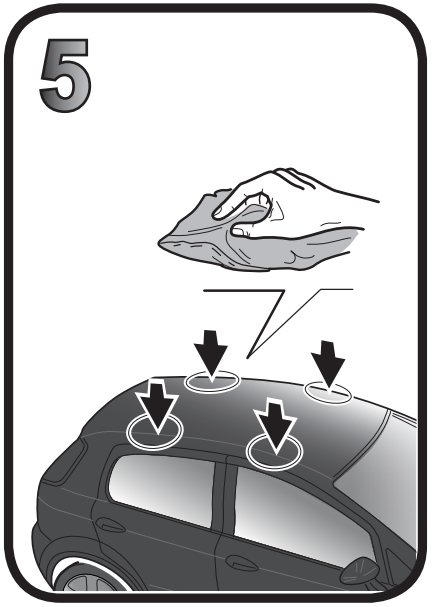

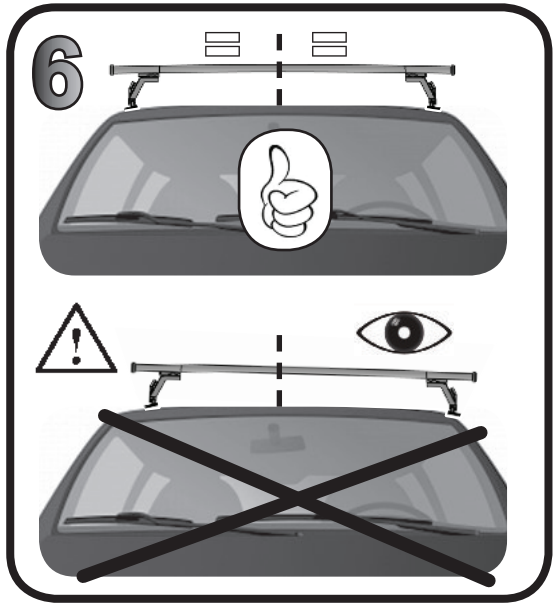

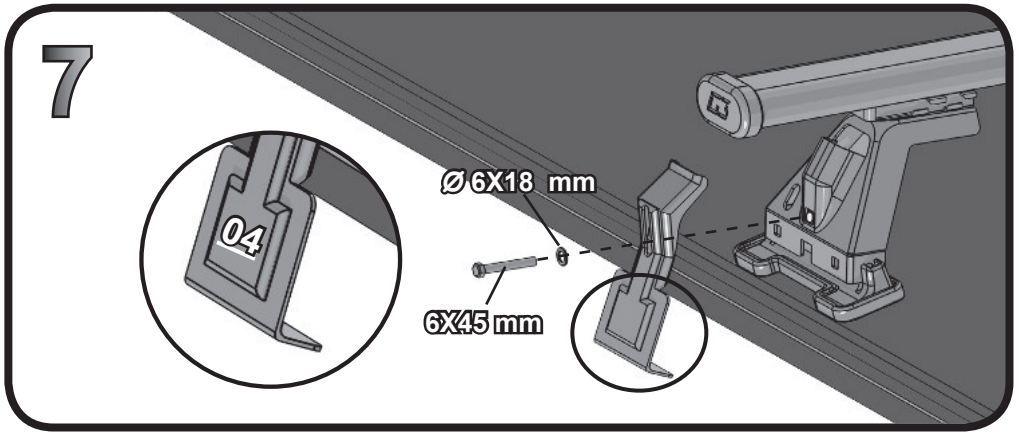

AUDI A3 5P (>2002)	F: 270 mm	R: 420 mm
DAEWOO Evanda 5P (03-06)	F: 200 mm	R: 400 mm
DAEWOO Kalos 5P (20303>)	F: 250 mm	R: 450 mm
DAEWOO Lanos 4-5P (1997>)	F: 300 mm	R: 300 mm
DAEWOO Nubira 4-5P (>2002)	F: 260 mm	R: 310 mm
DAIHATSU Sirion 5P (>2005)	F: 300 mm	R: 400 mm
FORD Fiesta 5P (08-16)	F: 200 mm	R: 500 mm
KIA Shuma 5P (1998>)	F: 270 mm	R: 320 mm
MERCEDES Classe A 5P (>2004) Passo lungo / Long wheelbase	F: 180 mm	R: 520 mm
ROVER 75 4P (1993>)	F: 280 mm	R: 360 mm
SUZUKI Alto 5P (02-09)	F: 250 mm	R: 450 mm
VOLVO V40 5P (96-04)	F: 150 mm	R: 520 mm
VOLVO S40 4P (05-12)	F: 220 mm	R: 350 mm

