67.110.011

made in italy

ISTRUZIONI DI MONTAGGIO
FITTING INSTRUCTION

= 15 min.

	F	R
PEUGEOT 106 5P (91>04)		

9

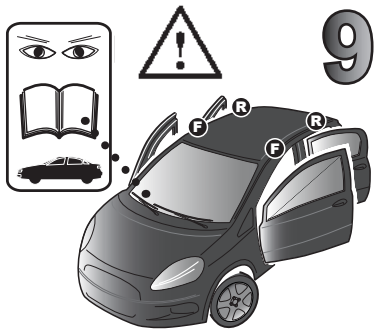

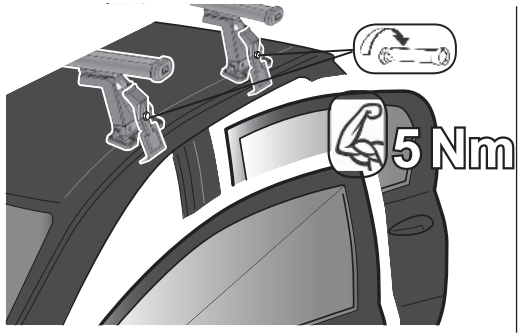

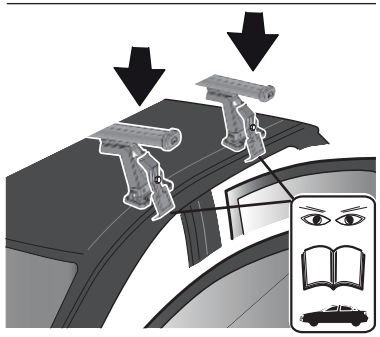

10

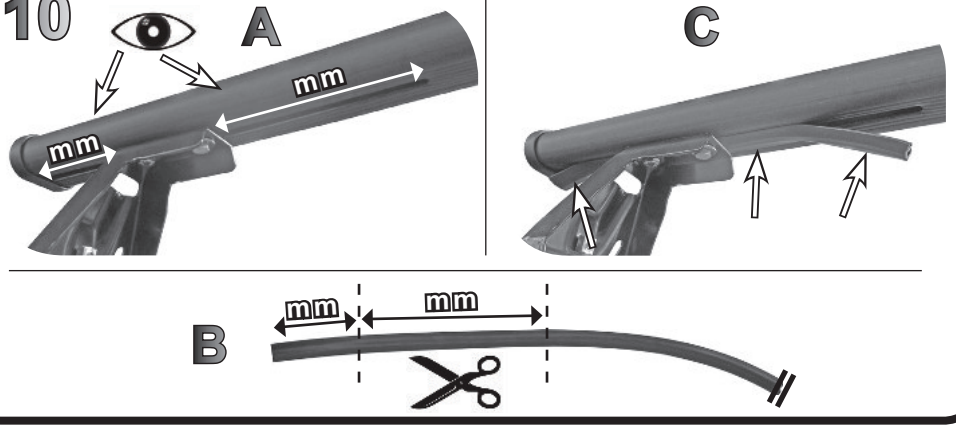



Max 50 Kg

G3 Spa - via S. Allende, n 15
42020 Montecavolo di Quattro Castella
Reggio E. - Italy
Tel ++39 0522 880635
Fax ++39 0522 880306
www.g3spa.it - info@g3spa.it

COD. AO.373

REV. 02

1

CITROËN AX 5P (ALL)	153 mm	153 mm
CITROËN Saxo 5P (96>03)	168 mm	181 mm
DAIHATSU Cuore 5P (>2002)	138 mm	138 mm
DAIHATSU Terios DB - DX 5P (>2005)	146 mm	152 mm
FORD Fiesta 5P (90>01)	153 mm	153 mm
HYUNDAI Accent 4/5P (95>99)	166 mm	171 mm
HYUNDAI i20 5P(08-13)	105 mm	112 mm
MAZDA 121 5P (1996>)	153 mm	153 mm
MERCEDES Classe A 5P (>2004) Passo corto / Short wheelbase	105 mm	125 mm
NISSAN Micra 5P (92>03)	163 mm	171 mm
PEUGEOT 106 5P (91>04)	173 mm	178 mm
PEUGEOT 205 5P (ALL)	163 mm	163 mm
SUZUKI Alto 5P (>2001)	124 mm	136 mm

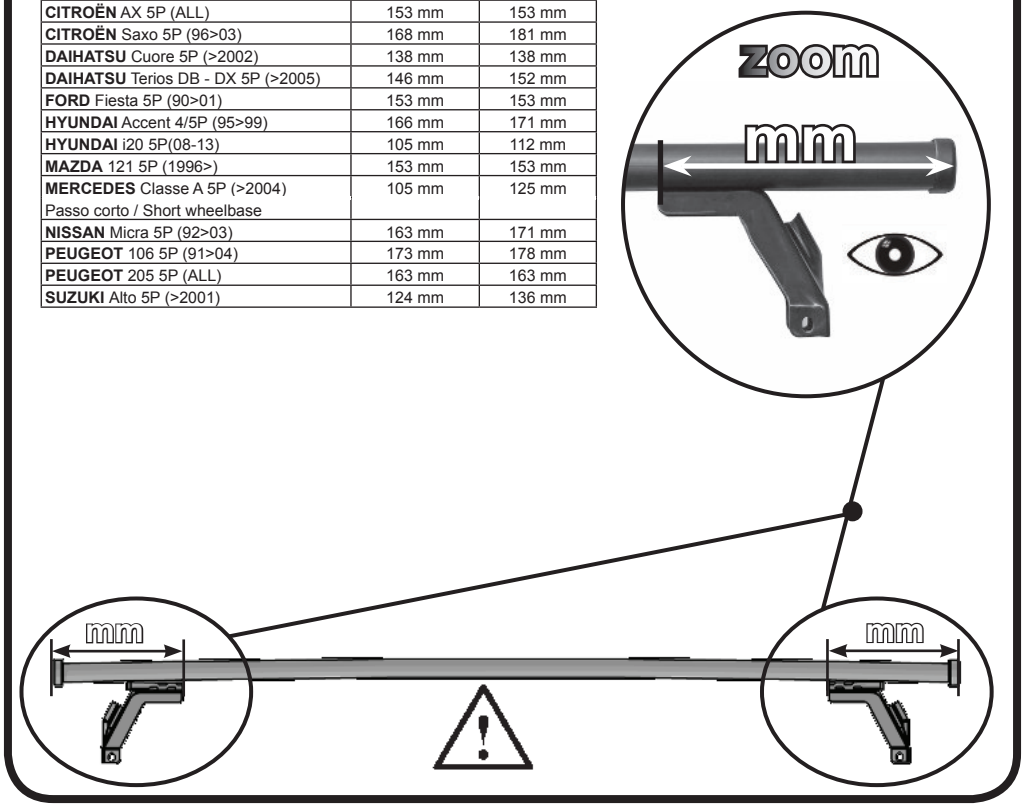

2

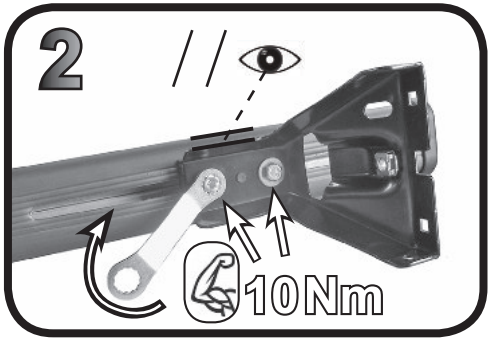

3

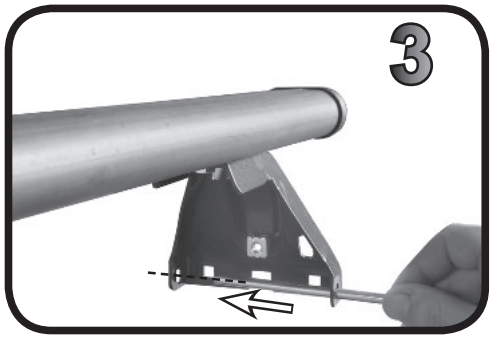

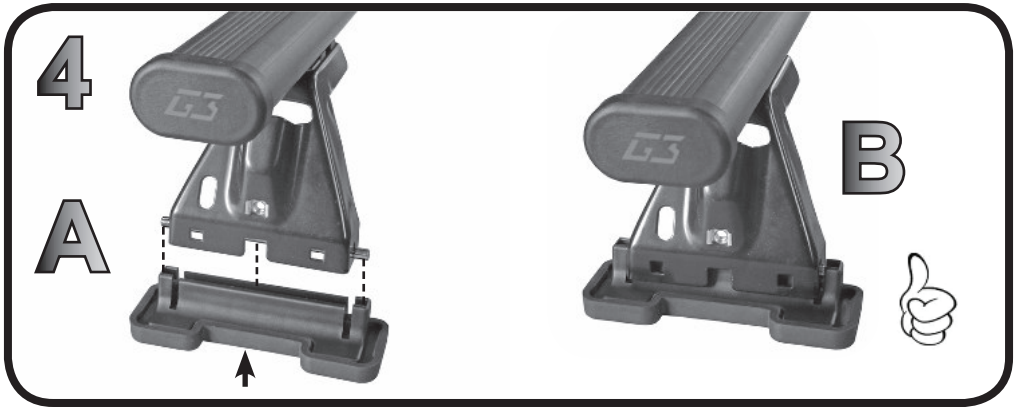

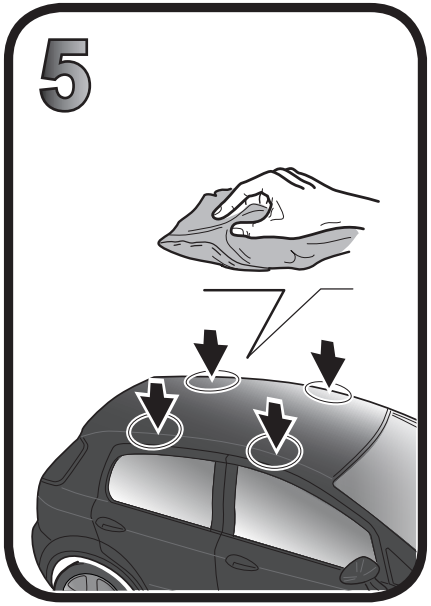

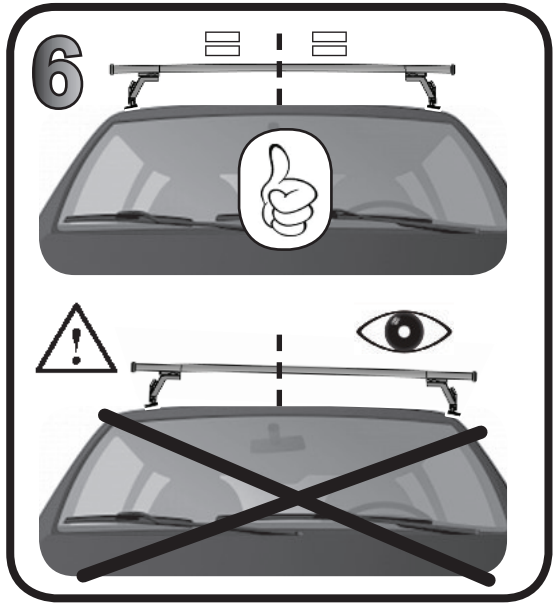

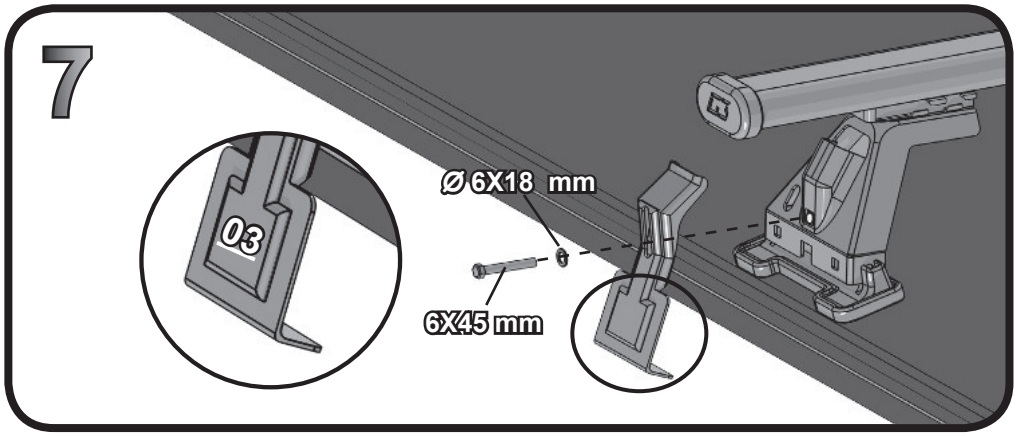

CITROËN AX 5P (ALL)	F: 350 mm	R: 350 mm
CITROËN Saxo 5P (96>03)	F: 280 mm	R: 380 mm
DAIHATSU Cuore 5P (>2002)	F: 350 mm	R: 350 mm
DAIHATSU Terios DB - DX 5P (>2005)	F: 330 mm	R: 370 mm
FORD Fiesta 5P (90>01)	F: 280 mm	R: 300 mm
HYUNDAI Accent 4/5P (95>99)	F: 350 mm	R: 350 mm
HYUNDAI i20 5P(08-13)	F: 240 mm	R: 460 mm
MAZDA 121 5P (1996>)	F: 280 mm	R: 300 mm
MERCEDES Classe A 5P (>2004) Passo corto / Short wheelbase	F: 180 mm	R: 520 mm
NISSAN Micra 5P (92>03)	F: 350 mm	R: 350 mm
PEUGEOT 205 5P (ALL)	F: 350 mm	R: 350 mm
SUZUKI Alto 5P (>2001)	F: 250 mm	R: 450 mm

