67.130.011

made in italy

ISTRUZIONI DI MONTAGGIO
FITTING INSTRUCTION

= 15 min.

AUDI A4 4P (04>08)	F	R
TOYOTA Urban cruiser 5P (2009>)	F	R
TOYOTA Yaris 5P (2011>)	F	R

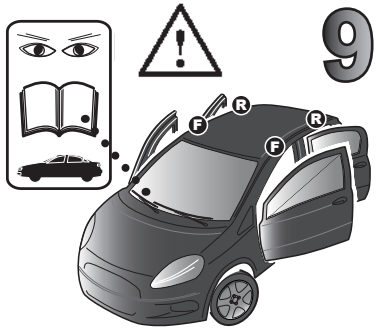

9

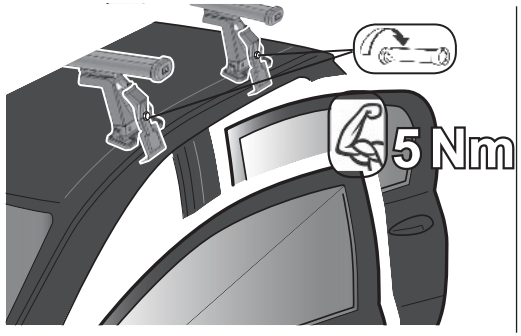

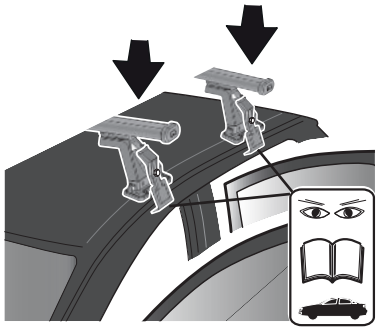

AUDI A4 4P (01>04)	111 mm	124 mm
AUDI A4 4P (04>08)	173 mm	190 mm
NISSAN Note 5P (2013>)	162 mm	172 mm
SUZUKI Celerio 5P (2014>)	180 mm	188 mm
TOYOTA Urban cruiser 5P (2009>)	195 mm	185 mm
TOYOTA Yaris 5P (2011>)	209 mm	218 mm

1

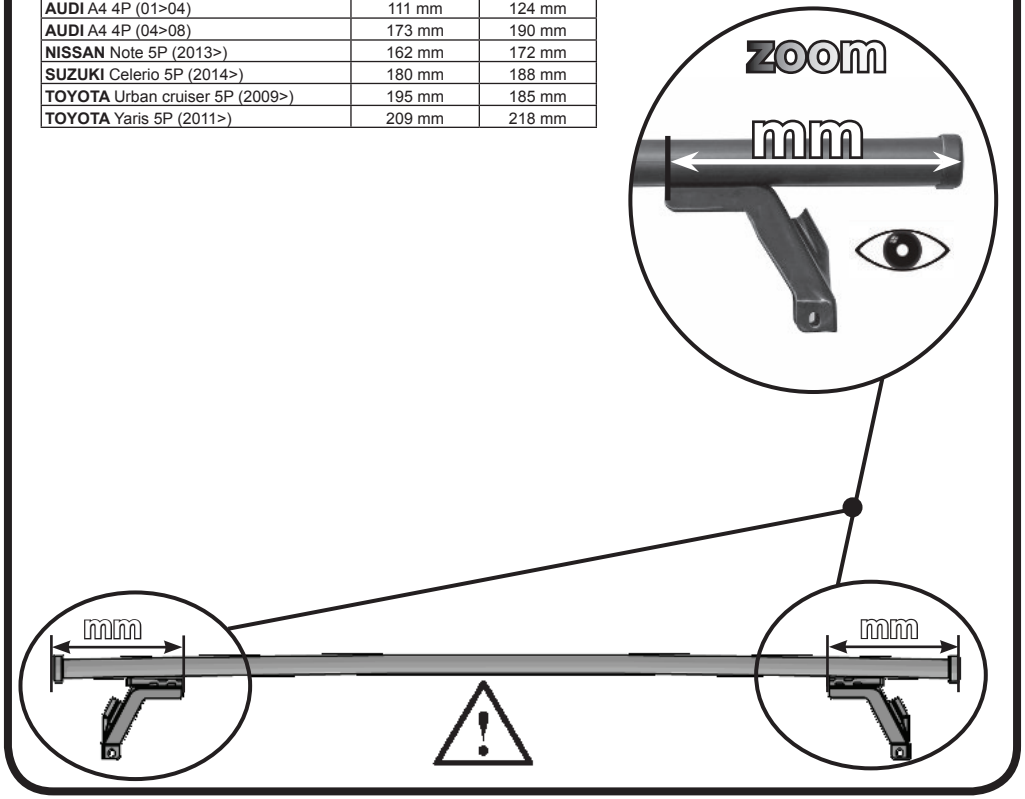

10

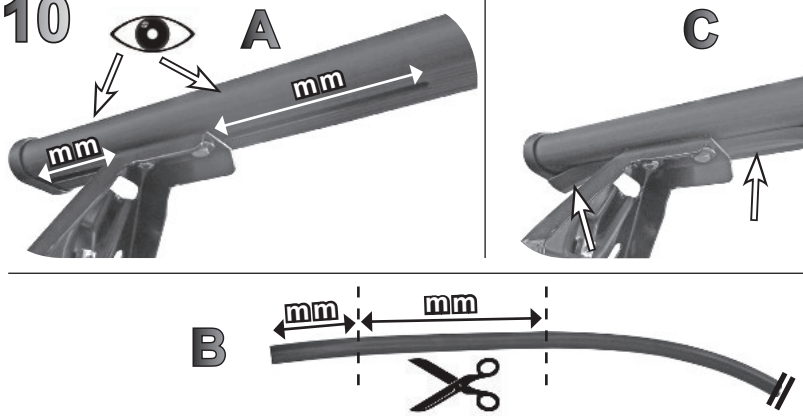





G3 Spa - via S. Allende, n 15
42020 Montecavolo di Quattro Castella
Reggio E. - Italy
Tel ++39 0522 880635
Fax ++39 0522 880306
www.g3spa.it - info@g3spa.it

COD. AO.371

REV. 02

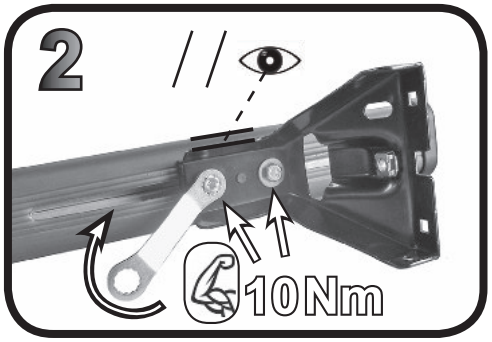

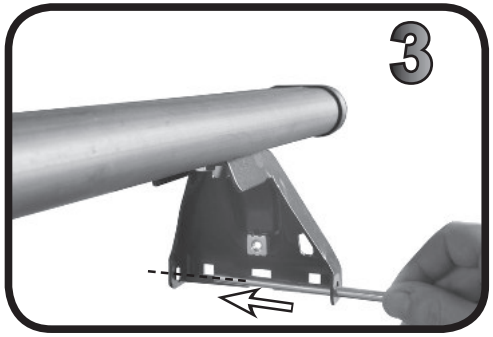

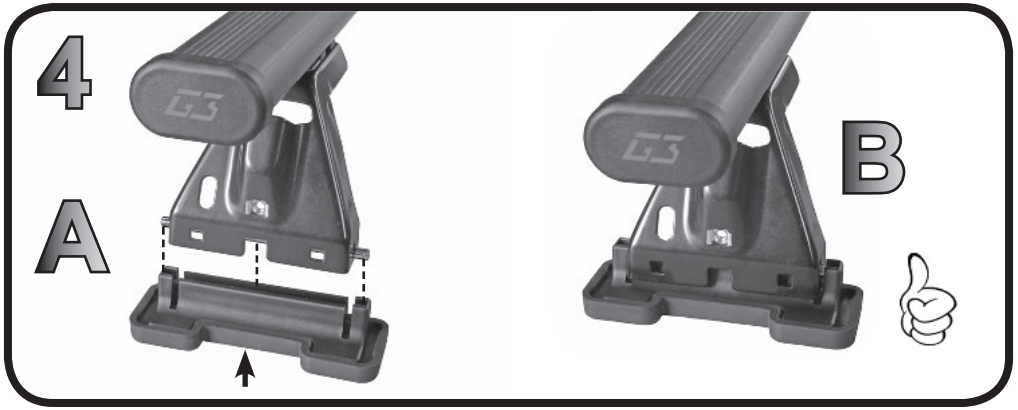

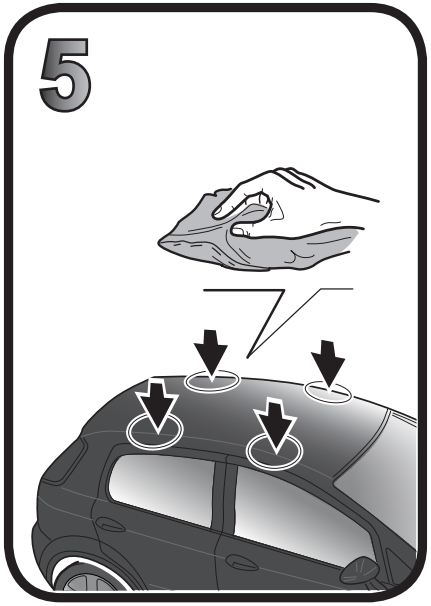

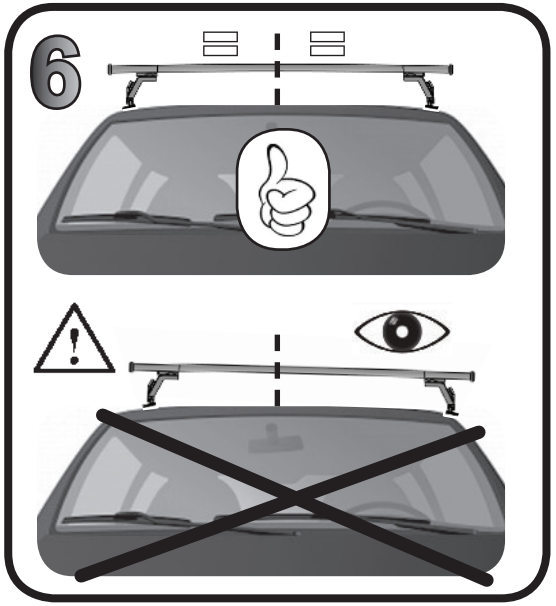

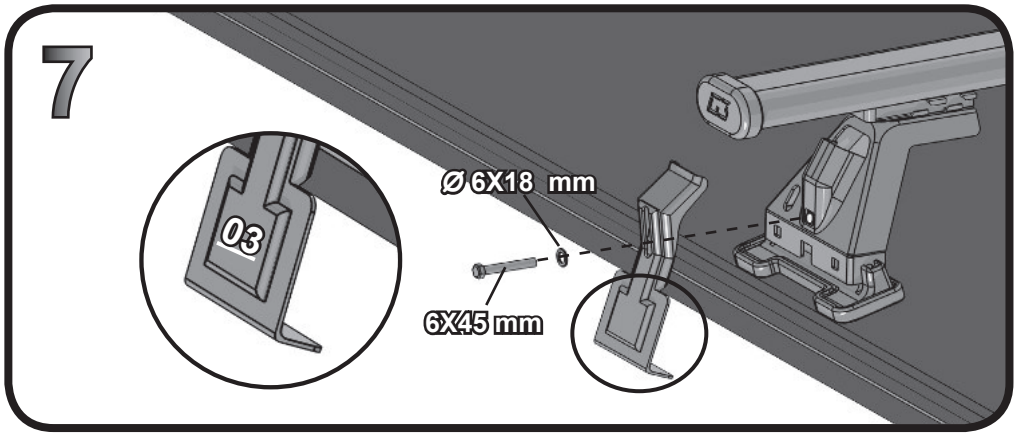

AUDI A4 4P (01>04)	F: 230 mm	R: 330 mm
NISSAN Note 5P (2013>)	F: 200 mm	R: 500 mm
SUZUKI Celerio 5P (2014>)	F: 300 mm	R: 400 mm

