68.900 G3

ISTRUZIONI DI MONTAGGIO
FITTING INSTRUCTION
"Acciaio / Steel"

= 15 min.

COMPATIBLES:
Cod. 61.110
Cod. 61.130
Cod. 61.300

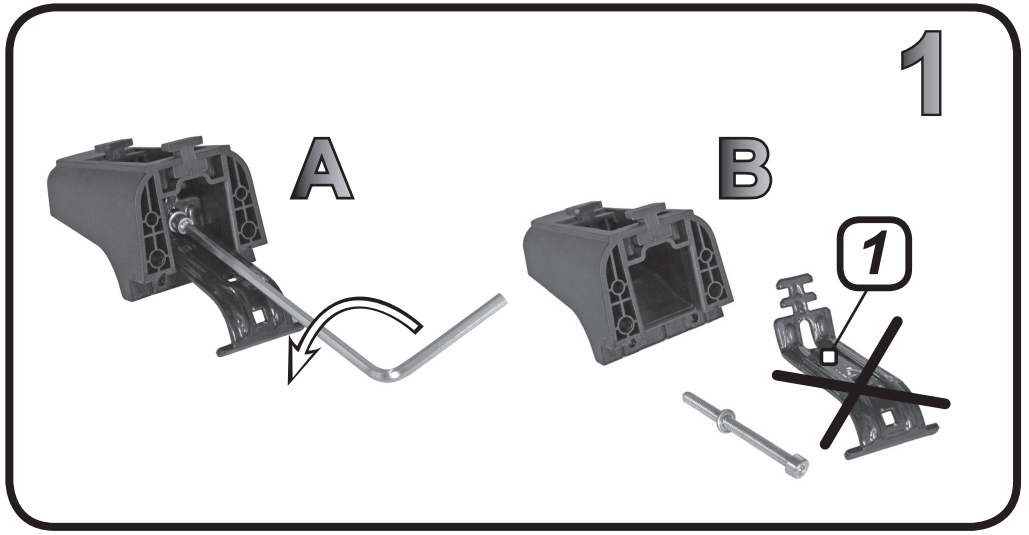

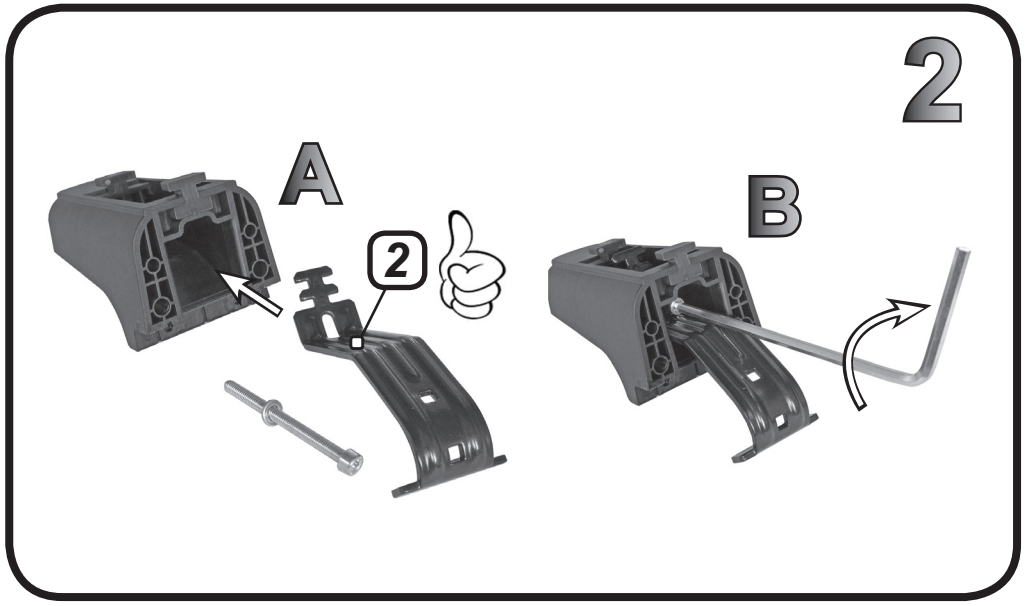

3

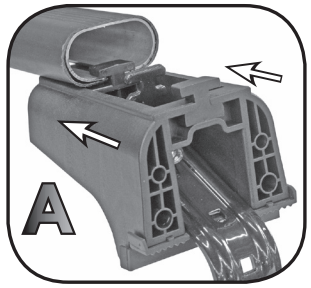

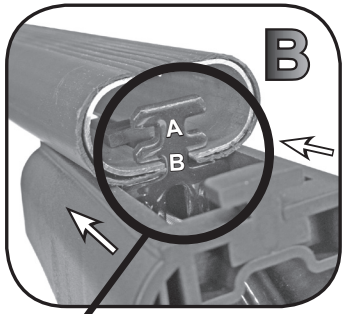

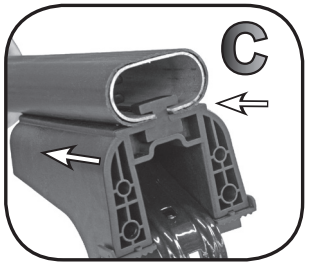



CITROËN	D	YEAR	
BERLINGO	5	2008>	A
CACTUS	5	2014>	A
C5 AIRCROSS	5	2018>	B
DACIA	D	YEAR	
DUSTER	5	14-17	A
DUSTER	5	18-21	B
JEEP	D	YEAR	
CHEROKEE	5	2014>	A
RENEGADE	5	14-18	B
NISSAN	D	YEAR	
PATHFINDER	5	2005>	A
PEUGEOT	D	YEAR	
PARTNER TEPEE	5	ALL	A
SKODA	D	YEAR	
YETI	5	2014>	B

G3 Spa - via S. Allende, n 15
42020 Montecavolo di Quattro Castella
Reggio E: - Italy
Tel ++39 0522 880635
Fax ++39 0522 880306
www.g3spa.it - info@g3spa.it

COD. AO.357 / ACC
REV. 03

68.900 G3

ISTRUZIONI DI MONTAGGIO
FITTING INSTRUCTION
"Alluminio / Aluminium"

= 15 min.

COMPATIBLES:
Cod. 60.110
Cod. 60.130
Cod. 60.210
Cod. 60.230

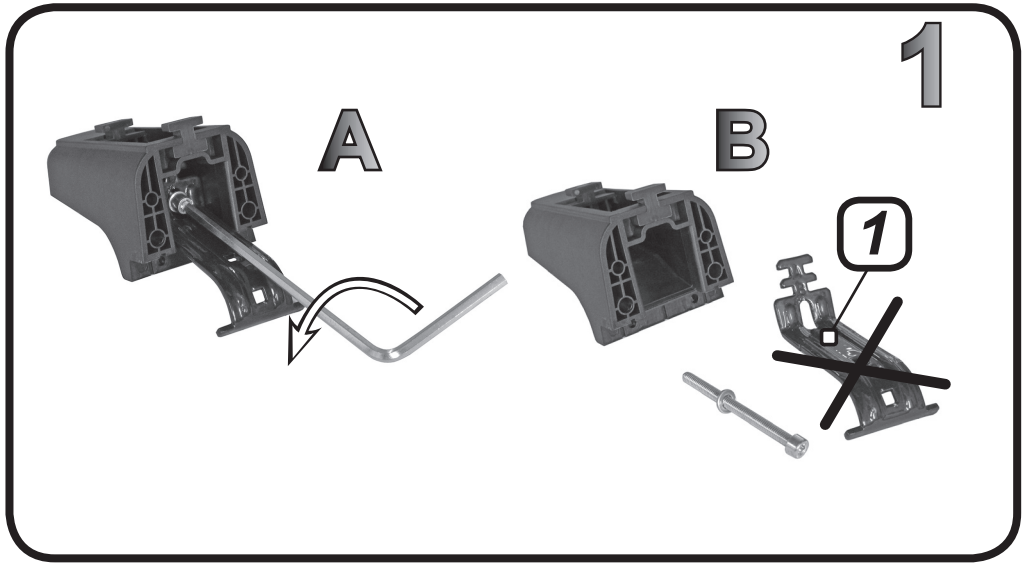

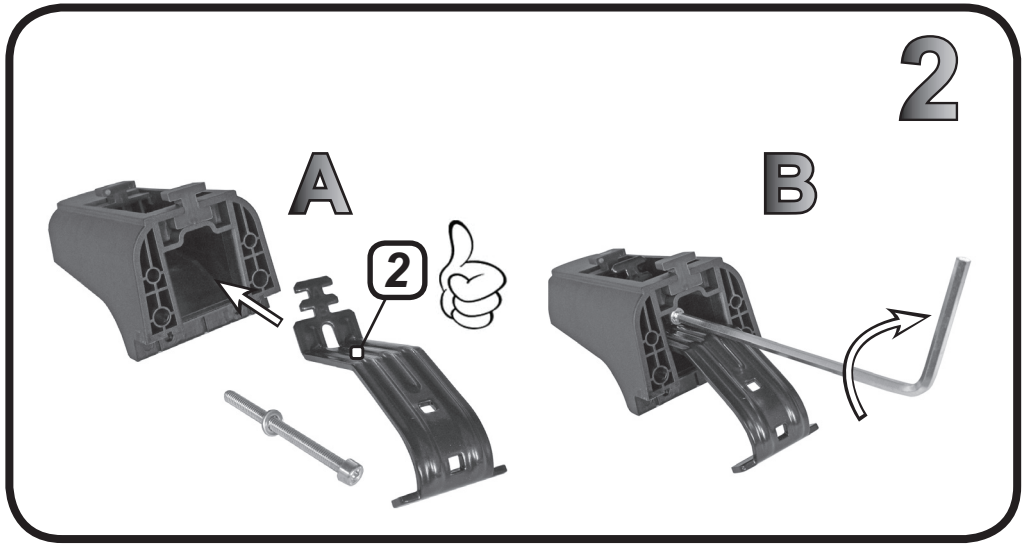

3

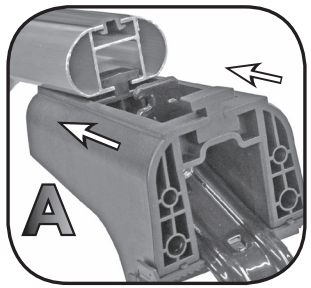

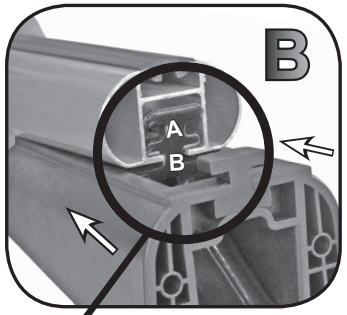

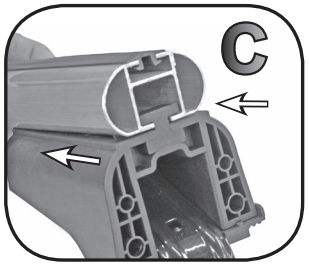



CITROËN	D	YEAR	
BERLINGO	5	2008>	A
CACTUS	5	2014>	A
C5 AIRCROSS	5	2018>	B
DACIA	D	YEAR	
DUSTER	5	14-17	A
DUSTER	5	18-21	B
JEEP	D	YEAR	
CHEROKEE	5	2014>	A
NISSAN	D	YEAR	
PATHFINDER	5	2005>	A
PEUGEOT	D	YEAR	
PARTNER TEPEE	5	ALL	A
SKODA	D	YEAR	
YETI	5	2014>	B

G3 Spa - via S. Allende, n 15
42020 Montecavolo di Quattro Castella
Reggio E: - Italy
Tel ++39 0522 880635
Fax ++39 0522 880306
www.g3spa.it - info@g3spa.it

COD. AO.357 / ALL
REV. 03