G3 Spa - via S. Allende, n 15
42020 Montecavolo di Quattro Castella
Reggio E: - Italy
Tel ++39 0522 880635
Fax ++39 0522 880306
www.g3spa.it - info@g3spa.it

COD. AO.552 / ACC
REV. 09

# 68.901 G3

## *ISTRUZIONI DI MONTAGGIO*
## *FITTING INSTRUCTION*
## *"Acciaio / Steel"*

= 15 min.

**COMPATIBLES: Cod. 61.110, Cod. 61.130, Cod. 61.300**

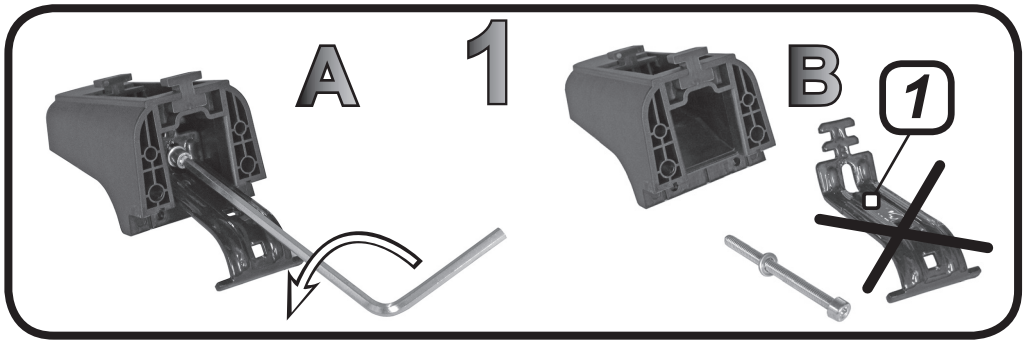


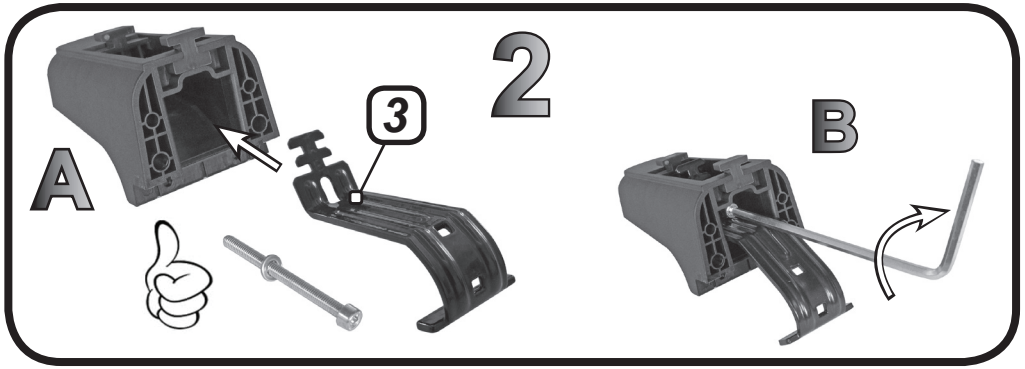


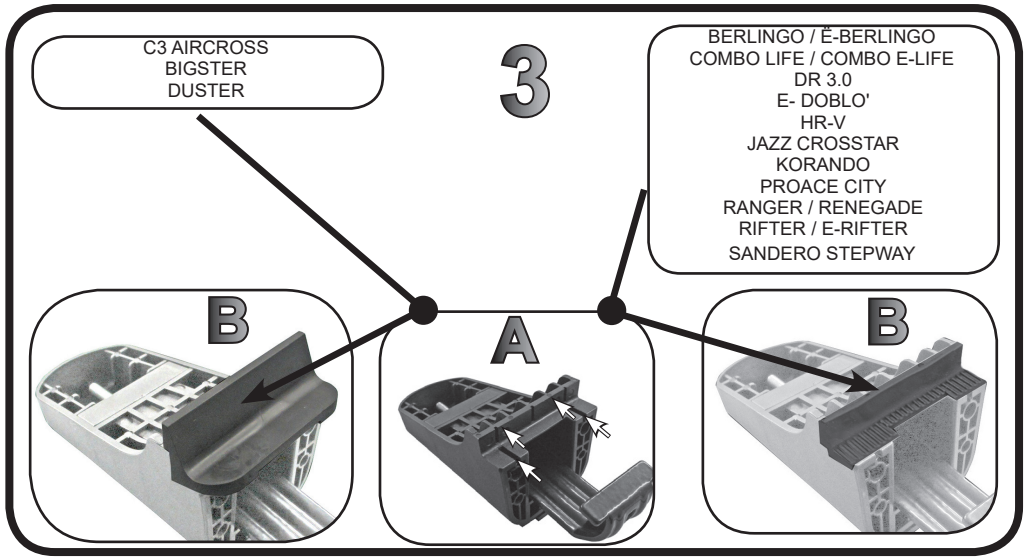

# 4

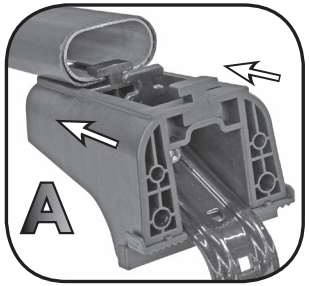


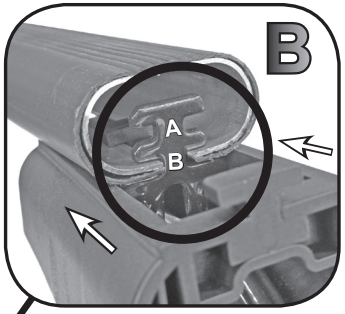


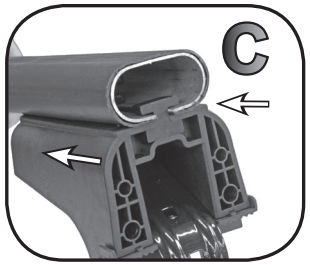









| CITROËN | D | YEAR | |
|---|---|---|---|
| C3 AIRCROSS | 5 | 2017> | A |
| BERLINGO | 5 | 18-23 | A |
| Ë-BERLINGO OPEN RAILS | 5 | 2023> | A |
| **DACIA** | **D** | **YEAR** | |
| BIGSTER (Essential, Expression, Journey) | 5 | 2025> | A |
| DUSTER (Essential, Expression, Journey) | 5 | 2024> | A |
| SANDERO STEPWAY | 5 | 2021> | A |
| **DR** | **D** | **YEAR** | |
| 3.0 | 5 | 2025> | B |
| **FORD** | **D** | **YEAR** | |
| RANGER | 4 | 2022> | B |
| **FIAT** | **D** | **YEAR** | |
| E-DOBLO' OPEN RAILS | 5 | 2023> | A |
| **HONDA** | **D** | **YEAR** | |
| HR-V | 5 | 2021> | A |
| JAZZ CROSSTAR | 5 | 2020> | B |
| **JEEP** | **D** | **YEAR** | |
| RENEGADE | 5 | 2018> | B |
| **OPEL** | **D** | **YEAR** | |
| COMBO LIFE | 5 | 18-23 | A |
| COMBO E-LIFE OPEN RAILS | 5 | 2023> | A |
| **PEUGEOT** | **D** | **YEAR** | |
| RIFTER | 5 | 18-23 | A |
| E-RIFTER OPEN RAILS | 5 | 2023 | A |
| **SSANYONG** | **D** | **YEAR** | |
| KORANDO | 5 | 2019> | A |
| **TOYOTA** | **D** | **YEAR** | |
| PROACE CITY | 5 | 2020> | A |

**68.901** G3

# ISTRUZIONI DI MONTAGGIO
# FITTING INSTRUCTION
# "Alluminio / Aluminium"

= 15 min.

**COMPATIBLES: Cod. 60.110, Cod. 60.300, Cod. 60.130, Cod. 60.210, Cod. 60.230**

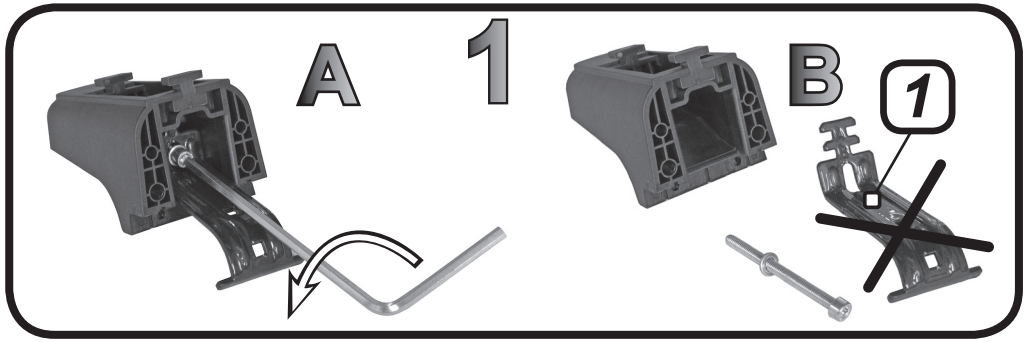


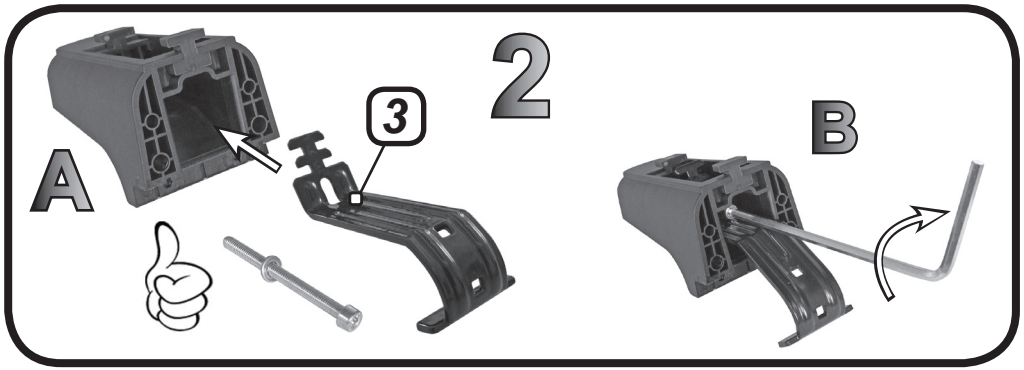


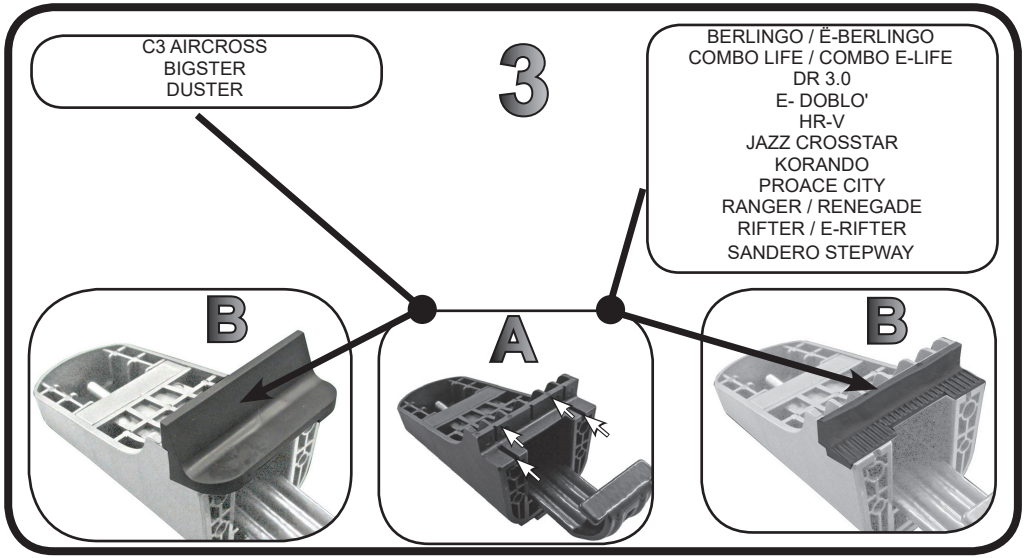



G3 Spa - via S. Allende, n 15
42020 Montecavolo di Quattro Castella
Reggio E: - Italy
Tel ++39 0522 880635
Fax ++39 0522 880306
www.g3spa.it - info@g3spa.it



COD. AO.552 / ALL
REV. 09

# 4

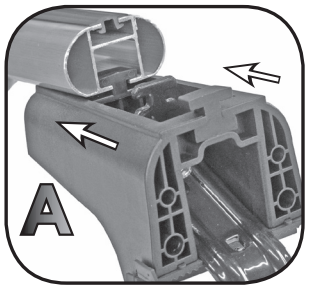


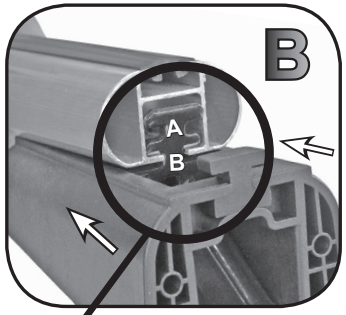


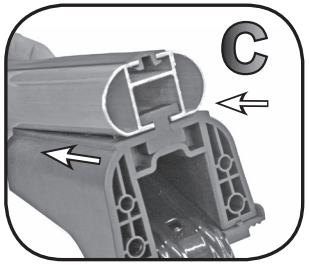









| CITROËN | D | YEAR | |
|---|---|---|---|
| C3 AIRCROSS | 5 | 2017> | A |
| BERLINGO | 5 | 18-23 | A |
| Ë-BERLINGO OPEN RAILS | 5 | 2023> | A |
| **DACIA** | **D** | **YEAR** | |
| BIGSTER (Essential, Expression, Journey) | 5 | 2025> | A |
| DUSTER (Essential, Expression, Journey) | 5 | 2024> | A |
| SANDERO STEPWAY | 5 | 2021> | A |
| **DR** | **D** | **YEAR** | |
| 3.0 | 5 | 2025> | B |
| **FORD** | **D** | **YEAR** | |
| RANGER | 4 | 2022> | B |
| **FIAT** | **D** | **YEAR** | |
| E-DOBLO' OPEN RAILS | 5 | 2023> | A |
| **HONDA** | **D** | **YEAR** | |
| HR-V | 5 | 2021> | A |
| JAZZ CROSSTAR | 5 | 2020> | B |
| **JEEP** | **D** | **YEAR** | |
| RENEGADE | 5 | 2018> | B |
| **OPEL** | **D** | **YEAR** | |
| COMBO LIFE | 5 | 18-23 | A |
| COMBO E-LIFE OPEN RAILS | 5 | 2023> | A |
| **PEUGEOT** | **D** | **YEAR** | |
| RIFTER | 5 | 18-23 | A |
| E-RIFTER OPEN RAILS | 5 | 2023 | A |
| **SSANYONG** | **D** | **YEAR** | |
| KORANDO | 5 | 2019> | A |
| **TOYOTA** | **D** | **YEAR** | |
| PROACE CITY | 5 | 2020> | A |