68.901

ISTRUZIONI DI MONTAGGIO
FITTING INSTRUCTION
"Acciaio / Steel"

= 15 min.

COMPATIBLES: Cod. 61.110, Cod. 61.130, Cod. 61.300

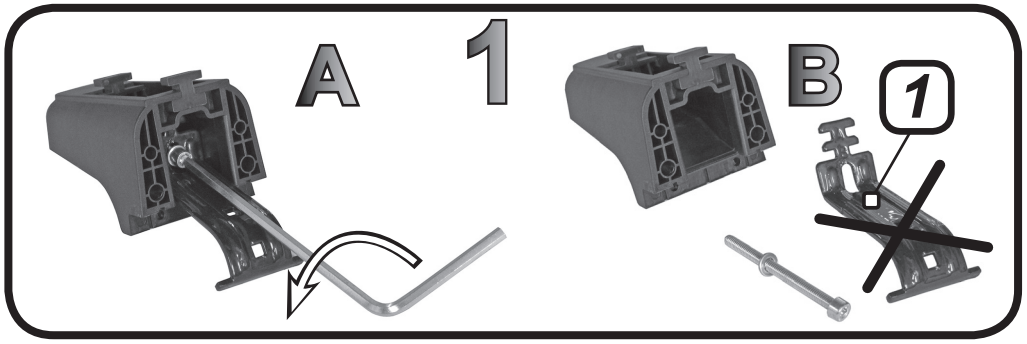

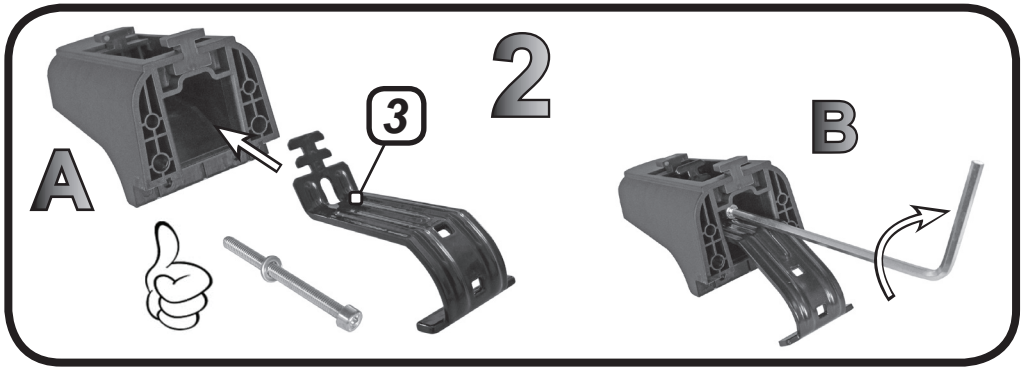

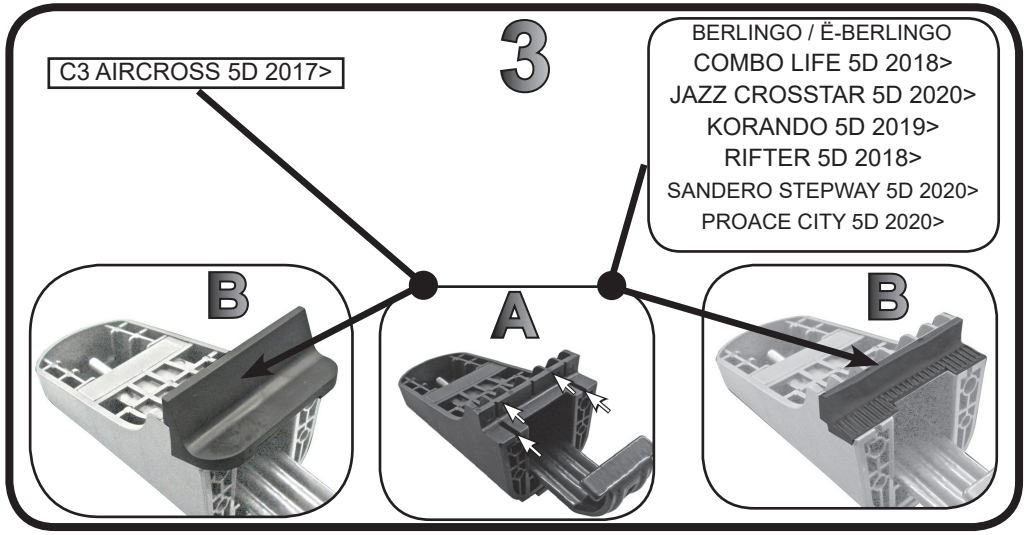

4

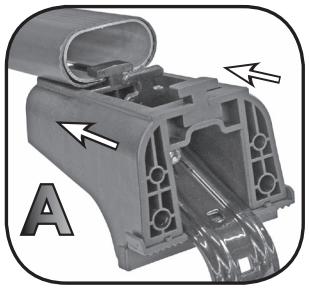

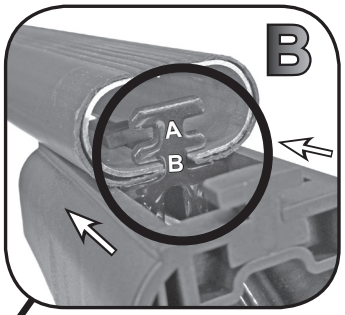

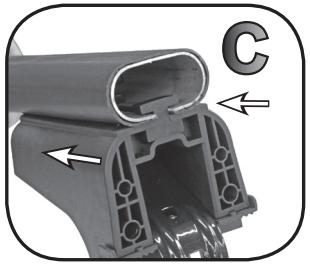

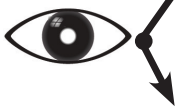





CITROËN	D	YEAR	
C3 AIRCROSS	5	2017>	A
BERLINGO	5	18-23	A
Ë-BERLINGO OPEN RAILS	5	2023>	A
DACIA	**D**	**YEAR**	
SANDERO STEPWAY	5	2021>	A
HONDA	**D**	**YEAR**	
JAZZ	5	2020>	B
OPEL	**D**	**YEAR**	
COMBO LIFE	5	2018>	A
PEUGEOT	**D**	**YEAR**	
RIFTER	5	2018>	A
SSANYONG	**D**	**YEAR**	
KORANDO	5	2019>	A
TOYOTA	**D**	**YEAR**	
PROACE CITY	5	2020>	A

G3 Spa - via S. Allende, n 15
42020 Montecavolo di Quattro Castella
Reggio E: - Italy
Tel ++39 0522 880635
Fax ++39 0522 880306
www.g3spa.it - info@g3spa.it

COD. AO.552 / ACC
REV. 06

68.901

ISTRUZIONI DI MONTAGGIO
FITTING INSTRUCTION
"Alluminio / Aluminium"

= 15 min.

COMPATIBLES: Cod. 60.110, Cod. 60.300, Cod. 60.130, Cod. 60.210, Cod. 60.230

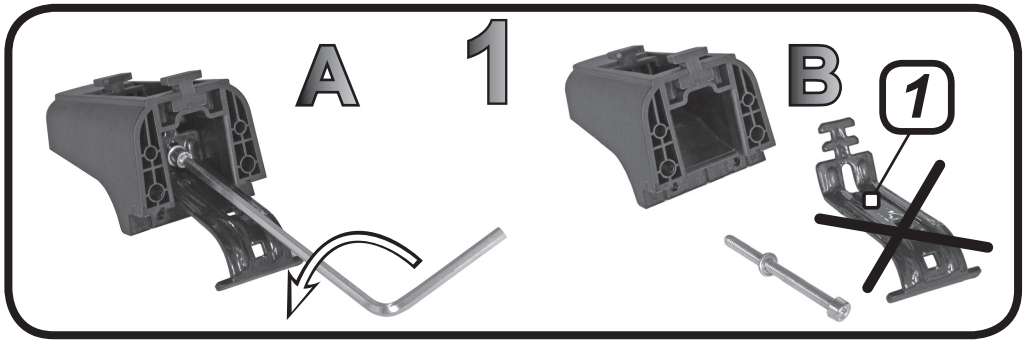

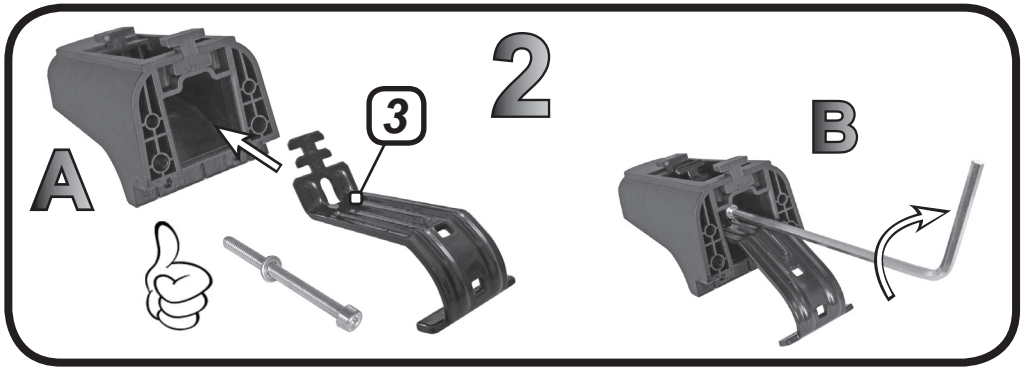

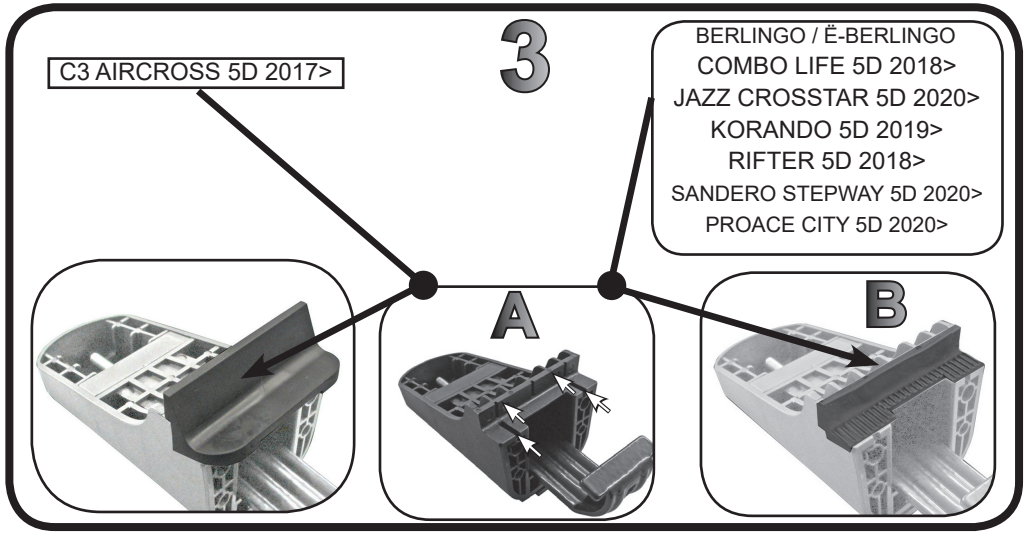

4

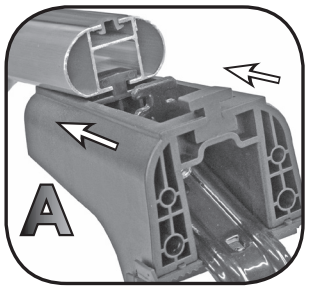

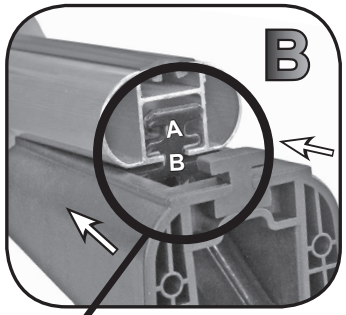

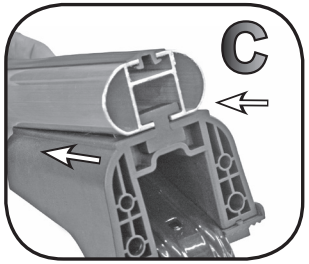







CITROËN	D	YEAR	
C3 AIRCROSS	5	2017>	A
BERLINGO	5	18-23	A
Ë-BERLINGO OPEN RAILS	5	2023>	A
DACIA	D	YEAR	
SANDERO STEPWAY	5	2021>	A
HONDA	D	YEAR	
JAZZ	5	2020>	B
OPEL	D	YEAR	
COMBO LIFE	5	2018>	A
PEUGEOT	D	YEAR	
RIFTER	5	2018>	A
SSANYONG	D	YEAR	
KORANDO	5	2019>	A
TOYOTA	D	YEAR	
PROACE CITY	5	2020>	A

G3 Spa - via S. Allende, n 15
42020 Montecavolo di Quattro Castella
Reggio E: - Italy
Tel ++39 0522 880635
Fax ++39 0522 880306
www.g3spa.it - info@g3spa.it

COD. AO.552 / ALL
REV. 06