68.010

ISTRUZIONI DI MONTAGGIO
FITTING INSTRUCTION
"Acciaio / Steel"

= 15 min.

ACURA TSX 4P (04-08)	104 mm	108 mm
ACURA TSX 4P (09-14)	76 mm	77 mm
AUDI A3 Sportback 5P (03-12)	113 mm	133 mm
AUDI 80 5P (1986>)	96 mm	107 mm
AUDI 100 5P (1991>)	63 mm	78 mm
AUDI A3 5P (>2002)	63 mm	83 mm
AUDI A6 4P (>1996)	31 mm	43 mm
AUDI A6 4P (97-04)	116 mm	111 mm
AUDI A6 4P (04-10)	99 mm	97 mm
BMW Serie 5 5P(03-10)	89 mm	89 mm
BMW Serie 5 touring 5P (04-10)	90 mm	100 mm
DAEWOO Evanda 5P (03-06)	77 mm	87 mm
DAEWOO Kalos 5P (2003>)	43 mm	57 mm
DAEWOO Lanos 4-5P (1997>)	82 mm	86 mm
DAEWOO Nubira 4-5P (>2002)	66 mm	71 mm
DAIHATSU Terios 5P (2006>)	96 mm	106 mm
DAIHATSU Sirion 5P (>2005)	42 mm	53 mm
FORD Fiesta 5P (08-16)	32 mm	43 mm
HONDA Accord 4P (02-07)	97 mm	95 mm
HONDA Accord 4P (13-17)	70mm	67 mm
HONDA Accord 5P (95-02)	66 mm	58 mm
HONDA Accord 5P (03-08)	107 mm	107mm
HONDA Civic 5P (01-06)	41 mm	44 mm
HONDA Stream 5P (00-06)	116 mm	121 mm
HYUNDAI Accent 4-5P (00-06)	61 mm	58mm
KIA Shuma 5P (1998>)	67 mm	67 mm
LEXUS CT 5P (2014>)	49 mm	49 mm
LEXUS ES 350 4P (13-18)	81 mm	79mm
MERCEDES Classe A 5P (>2004) Passo lungo / Long wheelbase	42 mm	59 mm
NISSAN Pulsar 5P (2014>)	96 mm	94 mm
NISSAN Qashqai 5P (2013>)	62 mm	64 mm
NISSAN Versa 4P (06-12)	90 mm	90 mm
PEUGEOT 605 4P (90-98)	101 mm	101 mm
RENAULT Espace 5P (>1996) Senza pred. orig. / Without original points	66 mm	66 mm
RENAULT Espace 5P (97-04) Senza pred. orig. / Without original points	60 mm	68 mm
ROVER 75 4P (1993>)	113 mm	113 mm
ROVER 600 4P (1993>)	66 mm	61 mm
SEAT Altea 5P (05-09)	100 mm	110 mm
SEAT Altea 5P (2009>)	109 mm	120 mm
SEAT Arosa 3P (98-05)	50 mm	74 mm
SEAT Toledo 4P (04-09)	100 mm	112 mm
SUZUKI Alto 5P (02-09)	116 mm	132 mm
TOYOTA Corolla 5P (02-07)	116 mm	101 mm
VOLVO V40 5P (96-04)	63 mm	83 mm
VOLVO V50 5P (04-12)	88 mm	94 mm
VOLVO S40 4P (96-04)	71 mm	77 mm
VOLVO S40 4P (05-12)	83 mm	78 mm
VW Lupo 3P (97-05)	44 mm	68 mm
VW Passat 4P (88-96)	68 mm	93 mm
VW Passat 4P (97-99)	41 mm	41 mm
VW Passat 4P (00-05)	33 mm	30 mm
VW Passat SW 4P (00-05)	33 mm	39 mm

1

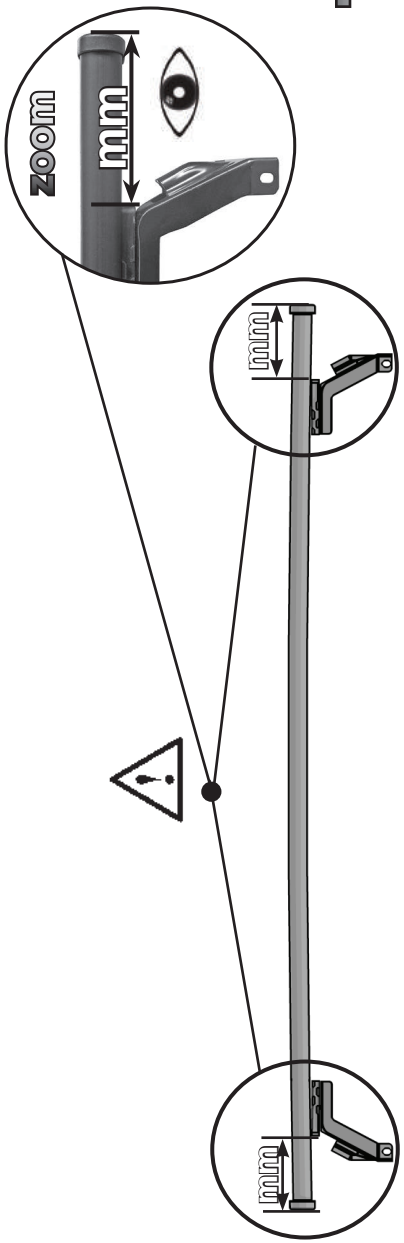

ACURA TSX 4P (04-08)	F	R
AUDI 80 5P (1986>)	F	R
AUDI 100 5P (1991>)	F	R
AUDI A6 4P (>1996)	F	R
AUDI A6 4P (97-04)	F	R
BMW Serie 5 5P(03-10)	F	R
BMW Serie 5 touring 5P (04-10)	F	R
HONDA Accord 4P (02-07) (13-17)	F	R
HONDA Accord 5P (95-02) (03-08)	F	R
HONDA Civic 5P (01-06)	F	R
HYUNDAI Accent 4-5P (00-06)	F	R
LEXUS CT 5P (2014>)	F	R
LEXUS ES 350 4P (13-18)	F	R
ROVER 600 5P (1993>)	F	R
SEAT Arosa 3P (98-05)	F	R
VW Lupo 3P (97-05)	F	R
VW Passat 4P (88-96)	F	R
VW Passat 4P (97-99)	F	R
VW Passat 4P (00-05)	F	R
VW Passat SW 4P (00-05)	F	R

9

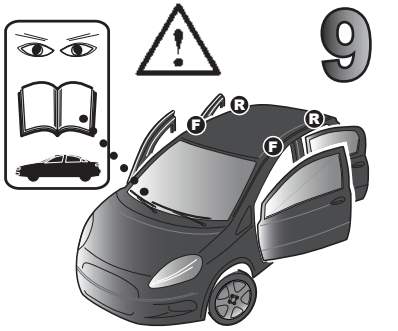

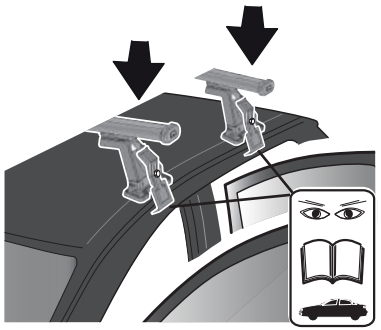

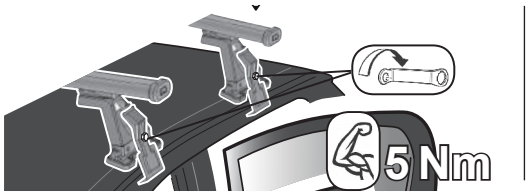

10

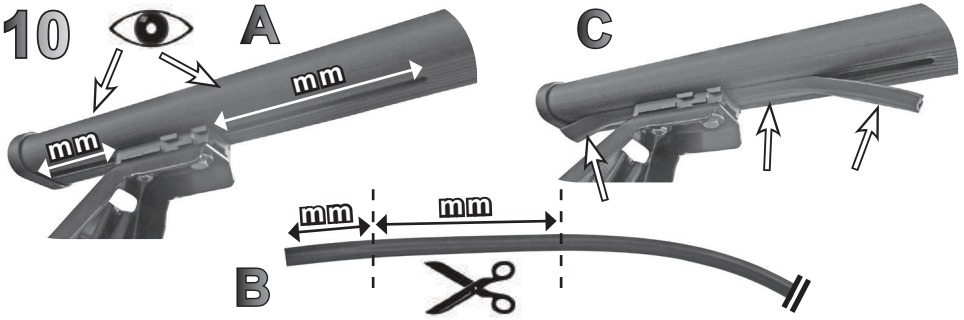

11

COD. AO.491



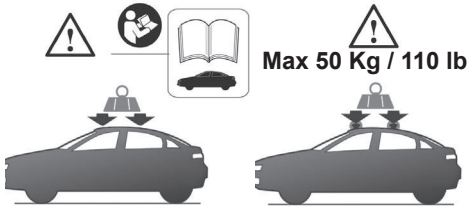

G3 Spa - via S. Allende, n 15
42020 Montecavolo di Quattro Castella
Reggio E. - Italy
Tel ++39 0522 880635
Fax ++39 0522 880306
www.g3spa.it - info@g3spa.it

COD. AO.276 / ACC

REV. 03

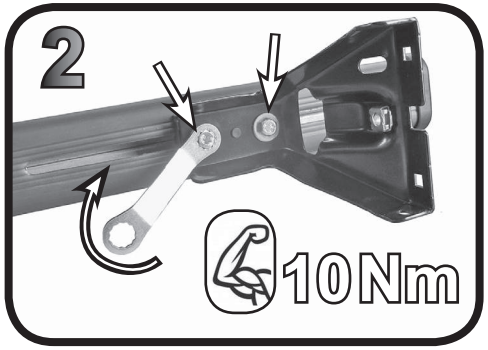

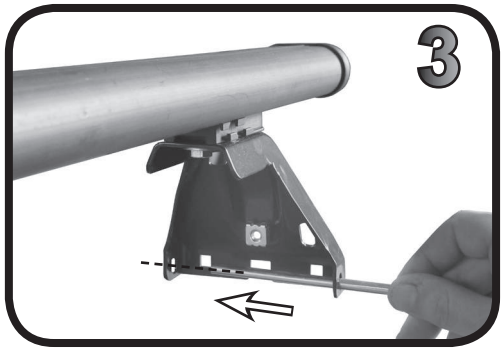

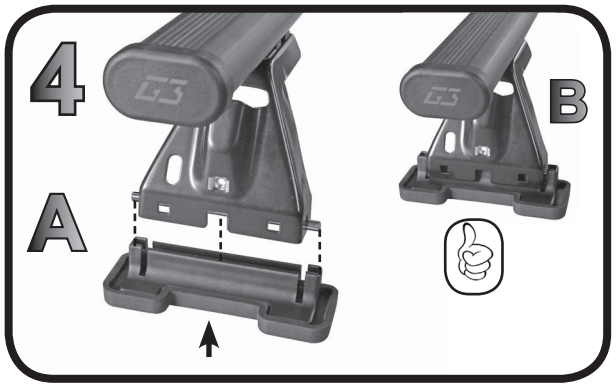

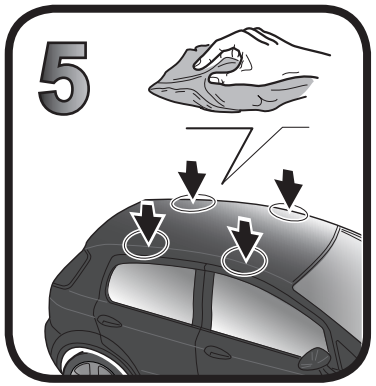

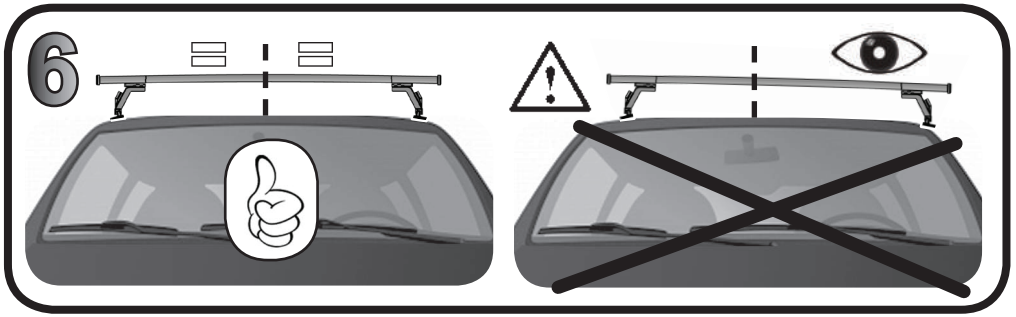

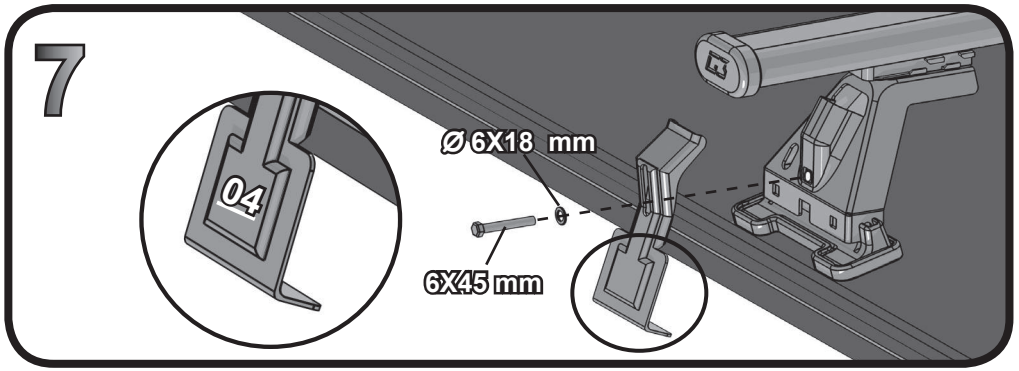

ACURA TSX 4P (09-14)	F: 240 mm	R: 320 mm
AUDI A3 Sportback 5P (03-12)	F: 200 mm	R: 500 mm
AUDI A3 5P (>2002)	F: 270 mm	R: 420 mm
AUDI A6 4P (04-10)	F: 300 mm	R: 400 mm
DAEWOO Evanda 5P (03-06)	F: 200 mm	R: 400 mm
DAEWOO Kalos 5P (2003>)	F: 250 mm	R: 450 mm
DAEWOO Lanos 4-5P (1997>)	F: 300 mm	R: 300 mm
DAEWOO Nubira 4-5P (>2002)	F: 260 mm	R: 310 mm
DAIHATSU Terios 5P (2006>)	F: 300 mm	R: 400 mm
DAIHATSU Sirion 5P (>2005)	F: 300 mm	R: 400 mm
FORD Fiesta 5P (08-16)	F: 200 mm	R: 500 mm
HONDA Stream 5P (00-06)	F: 250 mm	R: 450 mm
KIA Shuma 5P (1998>)	F: 270 mm	R: 320 mm
MERCEDES Classe A 5P (>2004)	F: 180 mm	R: 520 mm
Passo lungo / Long wheelbase		
NISSAN Pulsar 5P (2014>)	F: 250 mm	R: 450 mm
NISSAN Qashqai 5P (2013>)	F: 320 mm	R: 450 mm
NISSAN Versa 4P (06-12)	F: 250 mm	R: 350 mm
PEUGEOT 605 4P (90-98)	F: 350 mm	R: 350 mm
RENAULT Espace 5P (>1996)	F: 350 mm	R: 350 mm
Senza pred. orig. / Without original points		
RENAULT Espace 5P (97-04)	F: 350 mm	R: 350 mm
Senza pred. orig. / Without original points		
ROVER 75 4P (1993>)	F: 280 mm	R: 360 mm
SEAT Altea 5P (05-09)	F: 250 mm	R: 350 mm
SEAT Altea 5P (2009>)	F: 250 mm	R: 350 mm
SEAT Toledo 4P (04-09)	F: 280 mm	R: 400 mm
SUZUKI Alto 5P (02-09)	F: 250 mm	R: 450 mm
TOYOTA Corolla 5P (02-07)	F: 250 mm	R: 450 mm
VOLVO V40 5P (96-04)	F: 150 mm	R: 520 mm
VOLVO V50 5P (04-12)	F: 260 mm	R: 440 mm
VOLVO S40 4P (96-04)	F: 220 mm	R: 350 mm
VOLVO S40 4P (05-12)	F: 280 mm	R: 320 mm

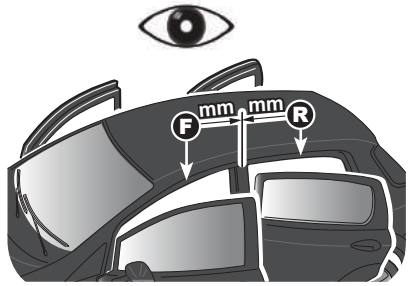

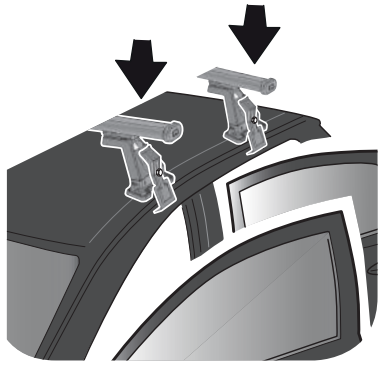

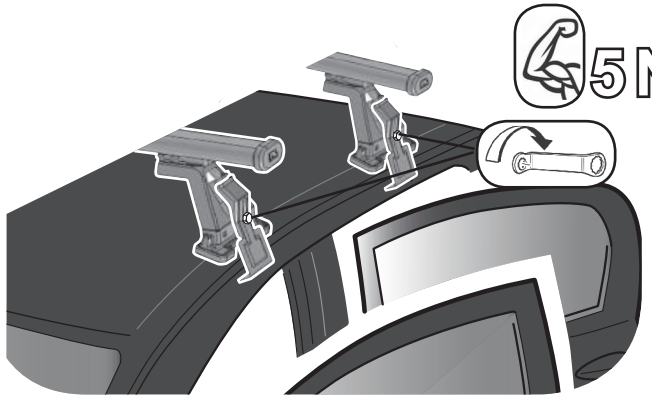

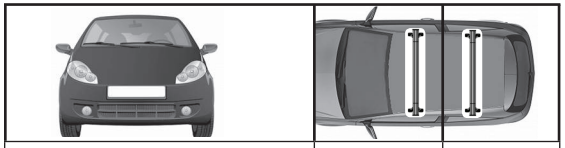

	F	R
ACURA TSX 4P (04-08)	F	R
AUDI 80 5P (1986>)	F	R
AUDI 100 5P (1991>)	F	R
AUDI A6 4P (>1996)	F	R
AUDI A6 4P (97-04)	F	R
BMW Serie 5 5P(03-10)	F	R
BMW Serie 5 touring 5P (04-10)	F	R
HONDA Accord 4P (02-07) (13-17)	F	R
HONDA Accord 5P (95-02) (03-08)	F	R
HONDA Civic 5P (01-06)	F	R
HYUNDAI Accent 4-5P (00-06)	F	R
LEXUS CT 5P (2014>)	F	R
LEXUS ES 350 4P (13-18)	F	R
ROVER 600 5P (1993>)	F	R
SEAT Arosa 3P (98-05)	F	R
VW Lupo 3P (97-05)	F	R
VW Passat 4P (88-96)	F	R
VW Passat 4P (97-99)	F	R
VW Passat 4P (00-05)	F	R
VW Passat SW 4P (00-05)	F	R

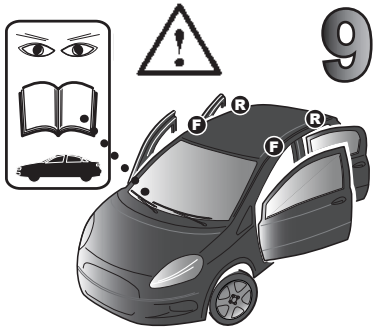

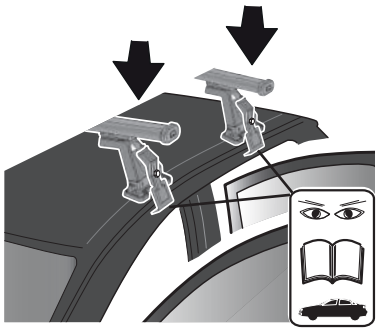



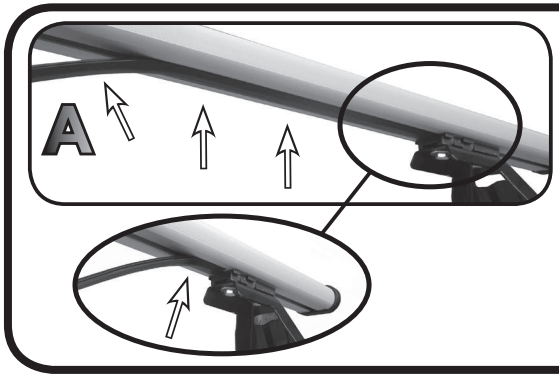





10

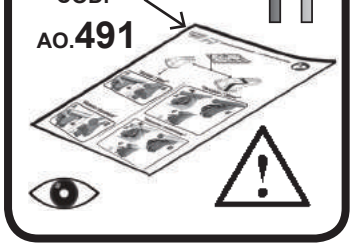

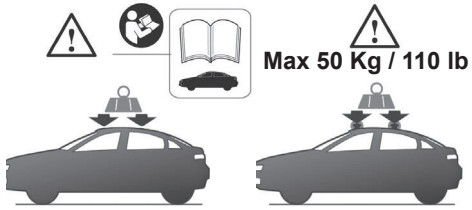

G3 Spa - via S. Allende, n 15
42020 Montecavolo di Quattro Castella
Reggio E. - Italy
Tel ++39 0522 880635
Fax ++39 0522 880306
www.g3spa.it - info@g3spa.it

COD. AO.276 / ALL

REV. 03

68.010 G3

ISTRUZIONI DI MONTAGGIO
FITTING INSTRUCTION
"Alluminio / Aluminium"

= 15 min.

ACURA TSX 4P (04-08)	104 mm	108 mm
ACURA TSX 4P (09-14)	76 mm	77 mm
AUDI A3 Sportback 5P (03-12)	113 mm	133 mm
AUDI 80 5P (1986>)	96 mm	107 mm
AUDI 100 5P (1991>)	63 mm	78 mm
AUDI A3 5P (>2002)	63 mm	83 mm
AUDI A6 4P (>1996)	31 mm	43 mm
AUDI A6 4P (97-04)	116 mm	111 mm
AUDI A6 4P (04-10)	99 mm	97 mm
BMW Serie 5 5P(03-10)	89 mm	89 mm
BMW Serie 5 touring 5P (04-10)	90 mm	100 mm
DAEWOO Evanda 5P (03-06)	77 mm	87 mm
DAEWOO Kalos 5P (2003>)	43 mm	57 mm
DAEWOO Lanos 4-5P (1997>)	82 mm	86 mm
DAEWOO Nubira 4-5P (>2002)	66 mm	71 mm
DAIHATSU Terios 5P (2006>)	96 mm	106 mm
DAIHATSU Sirion 5P (>2005)	42 mm	53 mm
FORD Fiesta 5P (08-16)	32 mm	43 mm
HONDA Accord 4P (02-07)	97 mm	95 mm
HONDA Accord 4P (13-17)	70mm	67 mm
HONDA Accord 5P (95-02)	66 mm	58 mm
HONDA Accord 5P (03-08)	107 mm	107mm
HONDA Civic 5P (01-06)	41 mm	44 mm
HONDA Stream 5P (00-06)	116 mm	121 mm
HYUNDAI Accent 4-5P (00-06)	61 mm	58mm
KIA Shuma 5P (1998>)	67 mm	67 mm
LEXUS CT 5P (2014>)	49 mm	49 mm
LEXUS ES 350 4P (13-18)	81 mm	79mm
MERCEDES Classe A 5P (>2004) Passo lungo / Long wheelbase	42 mm	59 mm
NISSAN Pulsar 5P (2014>)	96 mm	94 mm
NISSAN Qashqai 5P (2013>)	62 mm	64 mm
NISSAN Versa 4P (06-12)	90 mm	90 mm
PEUGEOT 605 4P (90-98)	101 mm	101 mm
RENAULT Espace 5P (>1996) Senza pred. orig. / Without original points	66 mm	66 mm
RENAULT Espace 5P (97-04) Senza pred. orig. / Without original points	60 mm	68 mm
ROVER 75 4P (1993>)	113 mm	113 mm
ROVER 600 4P (1993>)	66 mm	61 mm
SEAT Altea 5P (05-09)	100 mm	110 mm
SEAT Altea 5P (2009>)	109 mm	120 mm
SEAT Arosa 3P (98-05)	50 mm	74 mm
SEAT Toledo 4P (04-09)	100 mm	112 mm
SUZUKI Alto 5P (02-09)	116 mm	132 mm
TOYOTA Corolla 5P (02-07)	116 mm	101 mm
VOLVO V40 5P (96-04)	63 mm	83 mm
VOLVO V50 5P (04-12)	88 mm	94 mm
VOLVO S40 4P (96-04)	71 mm	77 mm
VOLVO S40 4P (05-12)	83 mm	78 mm
VW Lupo 3P (97-05)	44 mm	68 mm
VW Passat 4P (88-96)	68 mm	93 mm
VW Passat 4P (97-99)	41 mm	41 mm
VW Passat 4P (00-05)	33 mm	30 mm
VW Passat SW 4P (00-05)	33 mm	39 mm

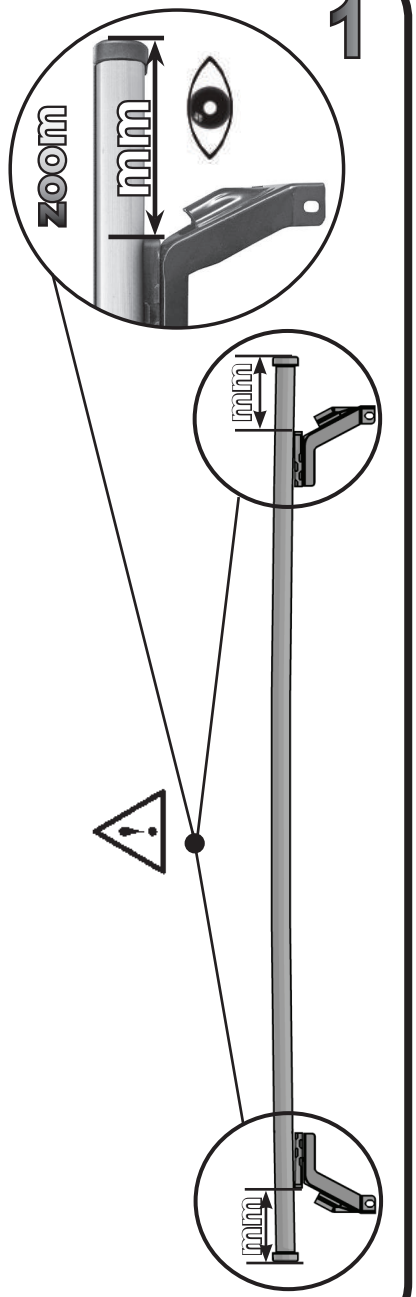

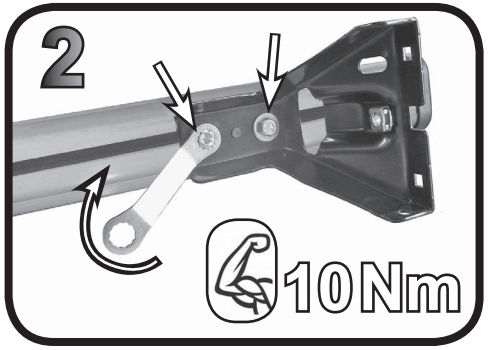

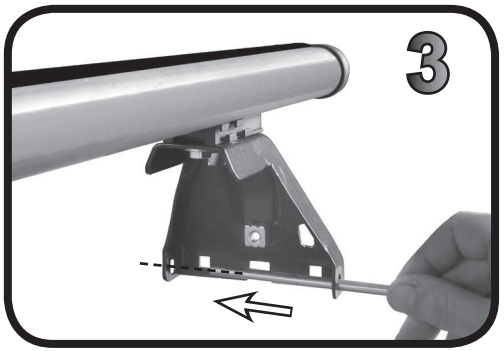

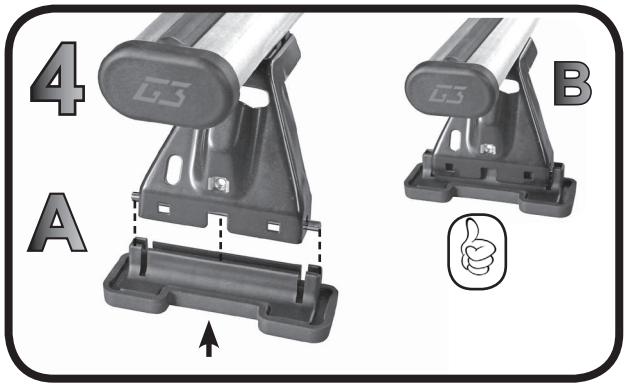

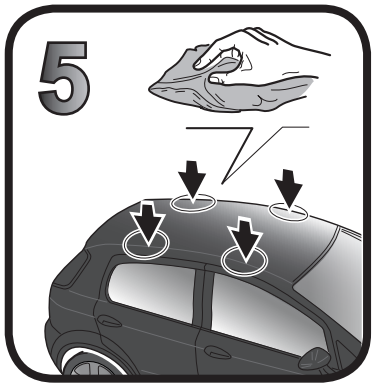

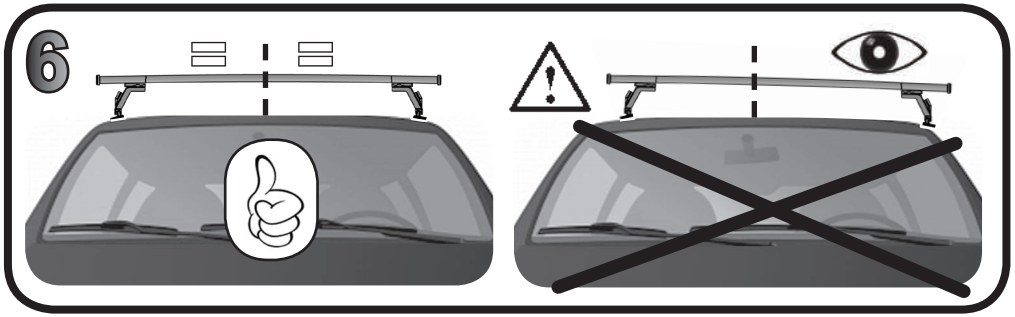

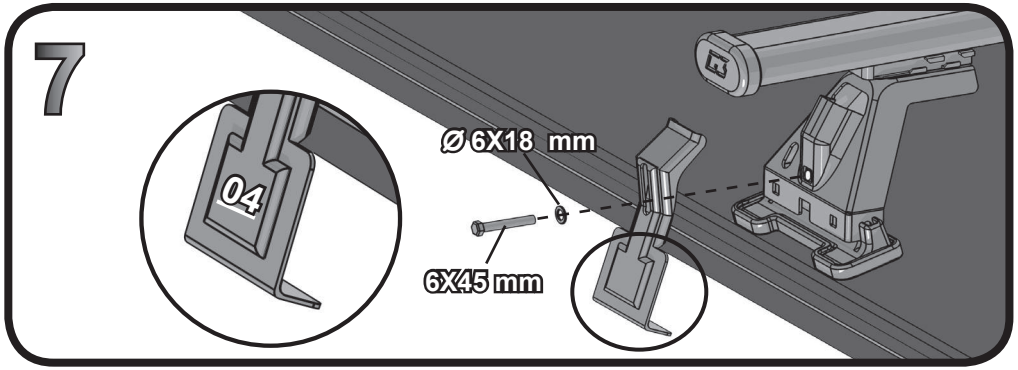

	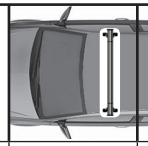	
ACURA TSX 4P (09-14)	F: 240 mm	R: 320 mm
AUDI A3 Sportback 5P (03-12)	F: 200 mm	R: 500 mm
AUDI A3 5P (>2002)	F: 270 mm	R: 420 mm
AUDI A6 4P (04-10)	F: 300 mm	R: 400 mm
DAEWOO Evanda 5P (03-06)	F: 200 mm	R: 400 mm
DAEWOO Kalos 5P (2003>)	F: 250 mm	R: 450 mm
DAEWOO Lanos 4-5P (1997>)	F: 300 mm	R: 300 mm
DAEWOO Nubira 4-5P (>2002)	F: 260 mm	R: 310 mm
DAIHATSU Terios 5P (2006>)	F: 300 mm	R: 400 mm
DAIHATSU Sirion 5P (>2005)	F: 300 mm	R: 400 mm
FORD Fiesta 5P (08-16)	F: 200 mm	R: 500 mm
HONDA Stream 5P (00-06)	F: 250 mm	R: 450 mm
KIA Shuma 5P (1998>)	F: 270 mm	R: 320 mm
MERCEDES Classe A 5P (>2004)	F: 180 mm	R: 520 mm
Passo lungo / Long wheelbase		
NISSAN Pulsar 5P (2014>)	F: 250 mm	R: 450 mm
NISSAN Qashqai 5P (2013>)	F: 320 mm	R: 450 mm
NISSAN Versa 4P (06-12)	F: 250 mm	R: 350 mm
PEUGEOT 605 4P (90-98)	F: 350 mm	R: 350 mm
RENAULT Espace 5P (>1996)	F: 350 mm	R: 350 mm
Senza pred. orig. / Without original points		
RENAULT Espace 5P (97-04)	F: 350 mm	R: 350 mm
Senza pred. orig. / Without original points		
ROVER 75 4P (1993>)	F: 280 mm	R: 360 mm
SEAT Altea 5P (05-09)	F: 250 mm	R: 350 mm
SEAT Altea 5P (2009>)	F: 250 mm	R: 350 mm
SEAT Toledo 4P (04-09)	F: 280 mm	R: 400 mm
SUZUKI Alto 5P (02-09)	F: 250 mm	R: 450 mm
TOYOTA Corolla 5P (02-07)	F: 250 mm	R: 450 mm
VOLVO V40 5P (96-04)	F: 150 mm	R: 520 mm
VOLVO V50 5P (04-12)	F: 260 mm	R: 440 mm
VOLVO S40 4P (96-04)	F: 220 mm	R: 350 mm
VOLVO S40 4P (05-12)	F: 280 mm	R: 320 mm

