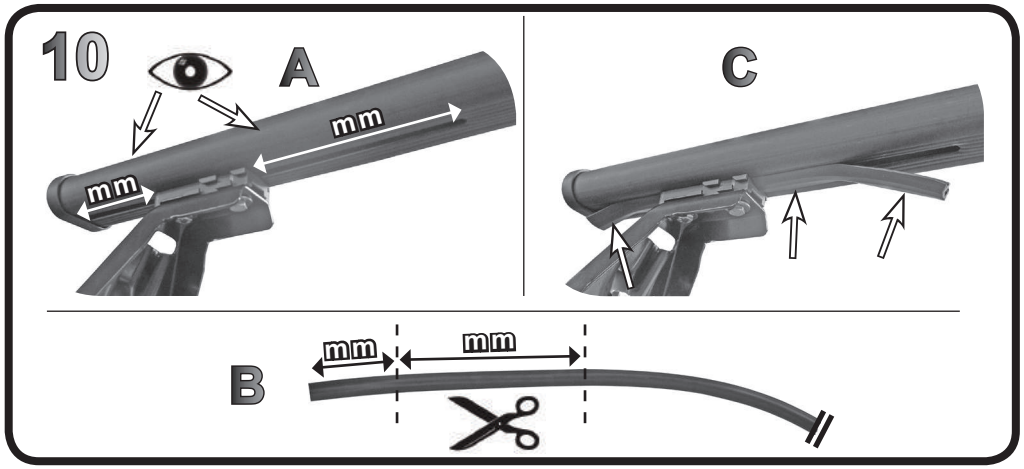

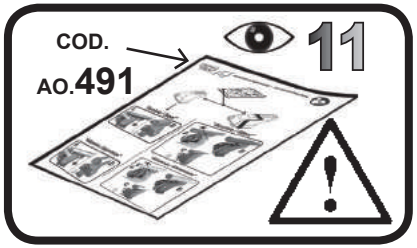

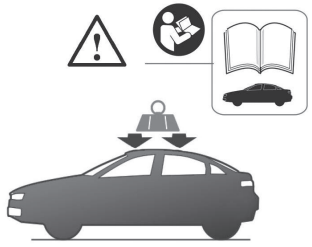

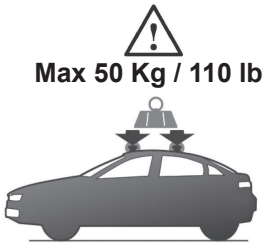

G3 Spa - via S. Allende, n 15
42020 Montecavolo di Quattro Castella
Reggio E: - Italy
Tel ++39 0522 880635
Fax ++39 0522 880306
www.g3spa.it - info@g3spa.it

COD. AO.289 / ACC

REV. 04

68.023



ISTRUZIONI DI MONTAGGIO
FITTING INSTRUCTION
"Acciaio / Steel"



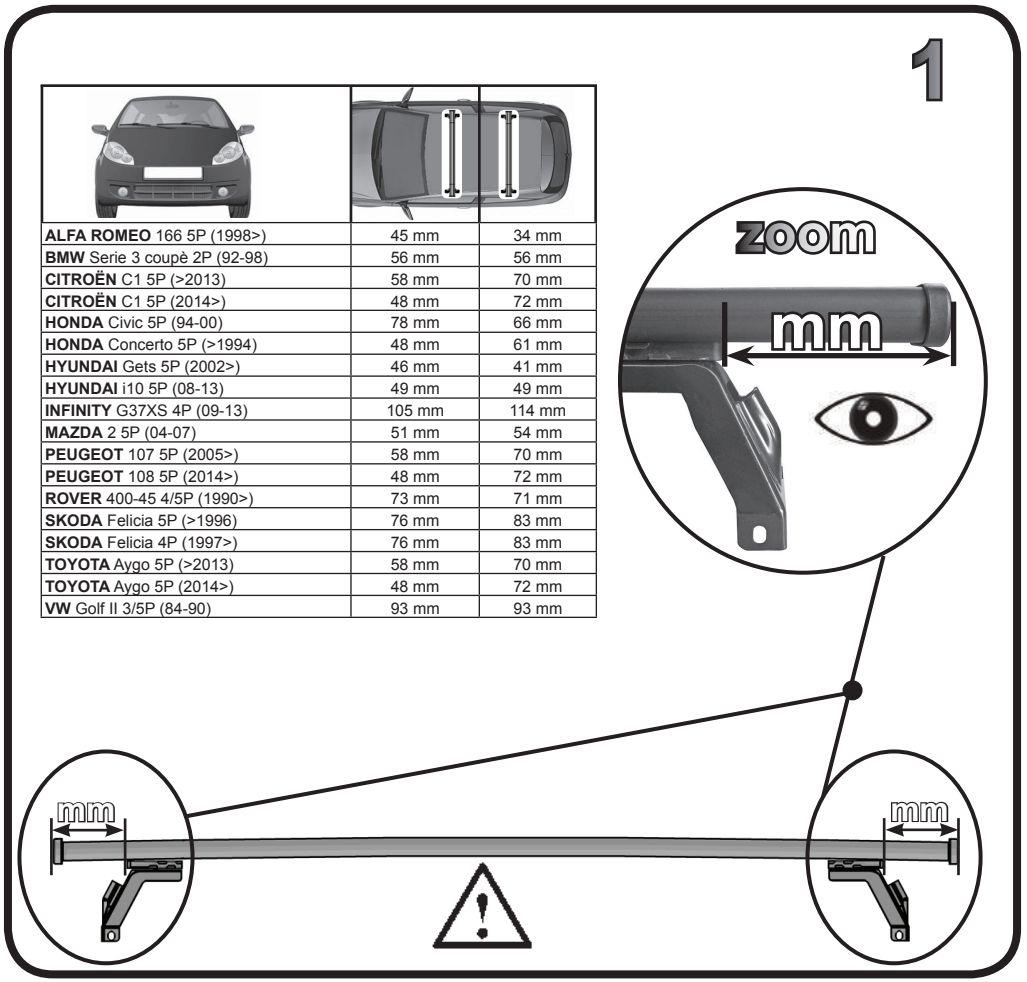

ALFA ROMEO 166 5P (1998>)	45 mm	34 mm
BMW Serie 3 coupè 2P (92-98)	56 mm	56 mm
CITROËN C1 5P (>2013)	58 mm	70 mm
CITROËN C1 5P (2014>)	48 mm	72 mm
HONDA Civic 5P (94-00)	78 mm	66 mm
HONDA Concerto 5P (>1994)	48 mm	61 mm
HYUNDAI Gets 5P (2002>)	46 mm	41 mm
HYUNDAI i10 5P (08-13)	49 mm	49 mm
INFINITY G37XS 4P (09-13)	105 mm	114 mm
MAZDA 2 5P (04-07)	51 mm	54 mm
PEUGEOT 107 5P (2005>)	58 mm	70 mm
PEUGEOT 108 5P (2014>)	48 mm	72 mm
ROVER 400-45 4/5P (1990>)	73 mm	71 mm
SKODA Felicia 5P (>1996)	76 mm	83 mm
SKODA Felicia 4P (1997>)	76 mm	83 mm
TOYOTA Aygo 5P (>2013)	58 mm	70 mm
TOYOTA Aygo 5P (2014>)	48 mm	72 mm
VW Golf II 3/5P (84-90)	93 mm	93 mm

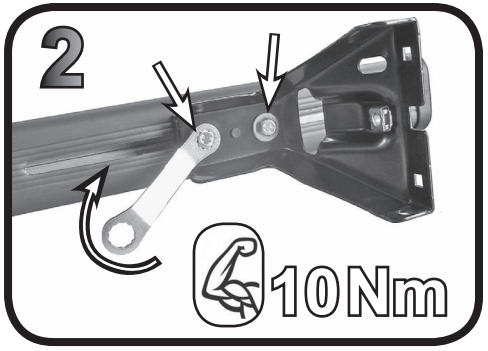

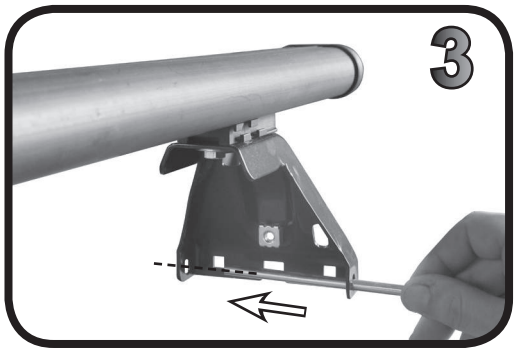

4



5

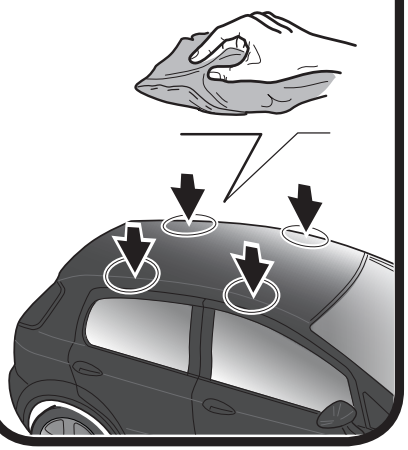

6

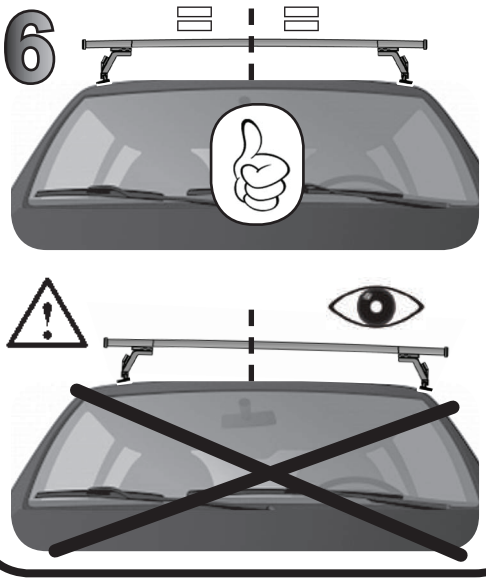

7

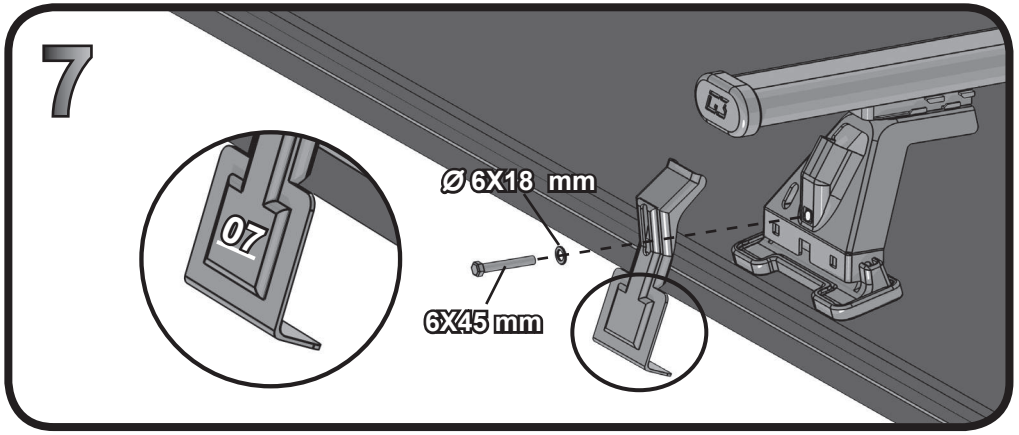

8

ALFA ROMEO 166 5P (1998>)	F: 250 mm	R: 350 mm
BMW Serie 3 coupè 2P (92-98)	F: 350 mm	R: 350 mm
CITROËN C1 5P (>2013)	F: 200 mm	R: 400 mm
CITROËN C1 5P (2014>)	F: 350 mm	R: 350 mm
HYUNDAI Gets 5P (2002>)	F: 300 mm	R: 400 mm
HYUNDAI i10 5P (08-13)	F: 200 mm	R: 400 mm
MAZDA 2 5P (04-07)	F: 250 mm	R: 450 mm
PEUGEOT 107 5P (2005>)	F: 200 mm	R: 400 mm
PEUGEOT 108 5P (2014>)	F: 350 mm	R: 350 mm
SKODA Felicia 5P (>1996)	F: 350 mm	R: 350 mm
SKODA Felicia 4P (1997>)	F: 300 mm	R: 300 mm
TOYOTA Aygo 5P (>2013)	F: 200 mm	R: 400 mm
TOYOTA Aygo 5P (2014>)	F: 350 mm	R: 350 mm
VW Golf II 3/5P (84-90)	F: 300 mm	R: 400 mm

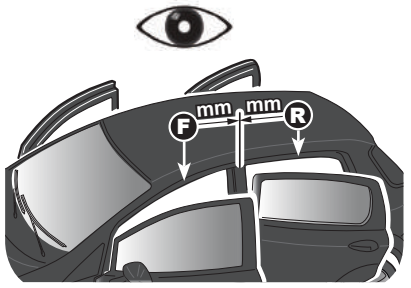

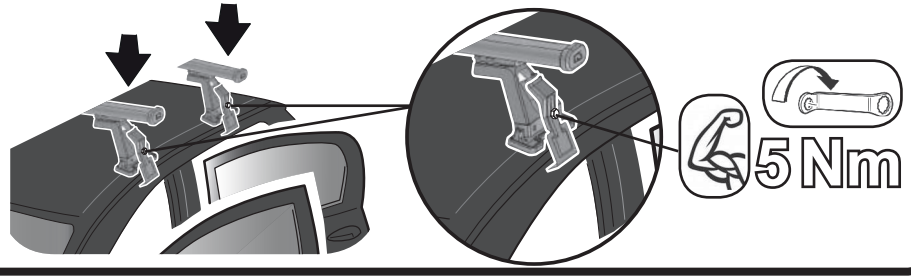

9

HONDA Civic 5P (94-00)	F	R
HONDA Concerto 5P (>1994)	F	R
INFINITY G37XS 4P (09-13)	F	R
ROVER 400-45 4/5P (1990>)	F	R

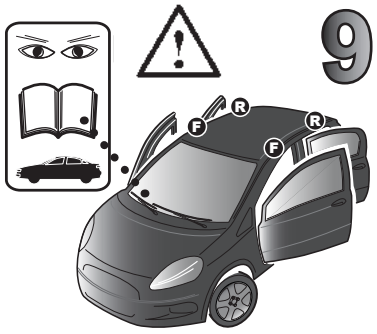

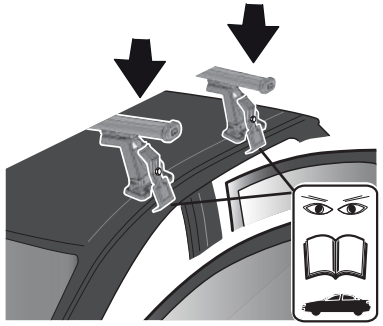

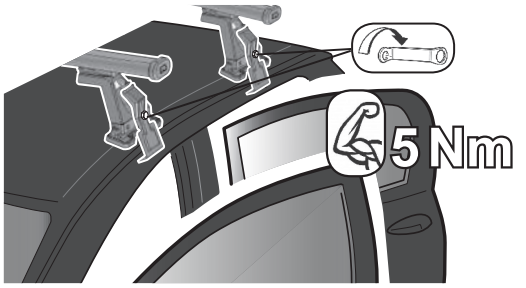

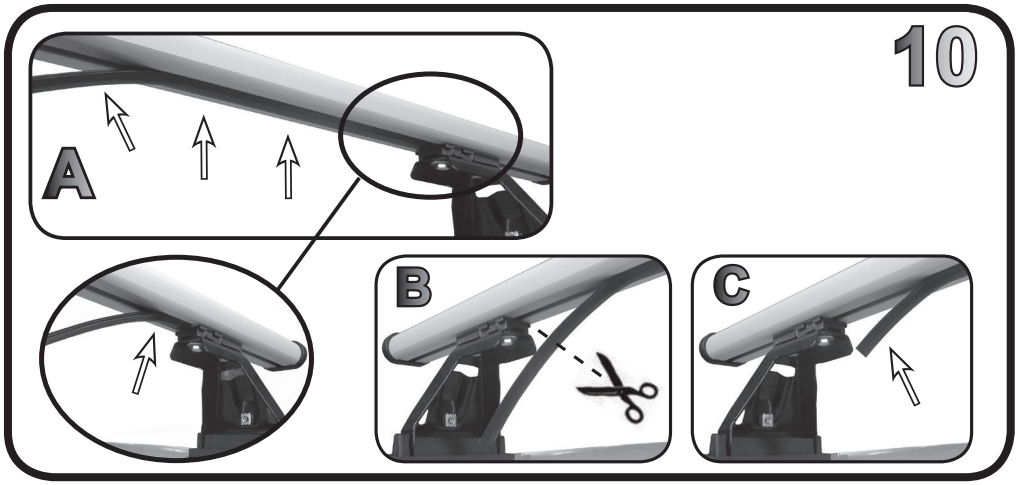

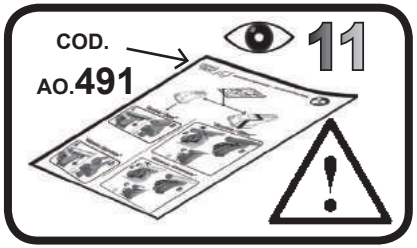

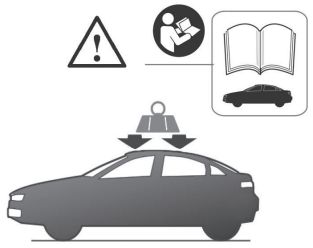

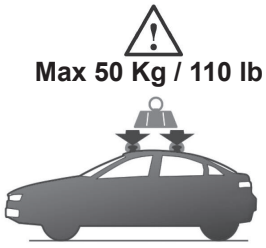

G3 Spa - via S. Allende, n 15
42020 Montecavolo di Quattro Castella
Reggio E. - Italy
Tel ++39 0522 880635
Fax ++39 0522 880306
www.g3spa.it - info@g3spa.it

COD. AO.289 / ALL
REV. 04

68.023 G3

ISTRUZIONI DI MONTAGGIO
FITTING INSTRUCTION
"Alluminio / Aluminium"

= 15 min.

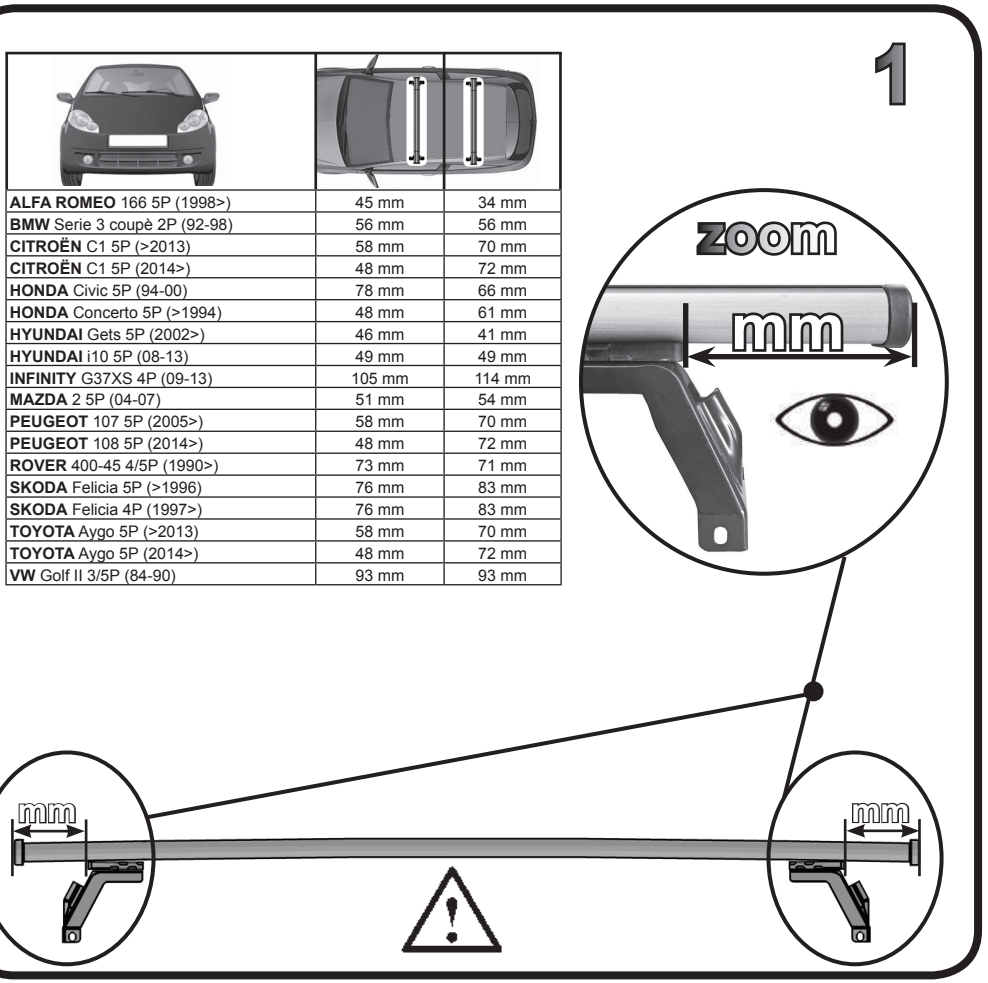

ALFA ROMEO 166 5P (1998>)	45 mm	34 mm
BMW Serie 3 coupè 2P (92-98)	56 mm	56 mm
CITROËN C1 5P (>2013)	58 mm	70 mm
CITROËN C1 5P (2014>)	48 mm	72 mm
HONDA Civic 5P (94-00)	78 mm	66 mm
HONDA Concerto 5P (>1994)	48 mm	61 mm
HYUNDAI Gets 5P (2002>)	46 mm	41 mm
HYUNDAI i10 5P (08-13)	49 mm	49 mm
INFINITY G37XS 4P (09-13)	105 mm	114 mm
MAZDA 2 5P (04-07)	51 mm	54 mm
PEUGEOT 107 5P (2005>)	58 mm	70 mm
PEUGEOT 108 5P (2014>)	48 mm	72 mm
ROVER 400-45 4/5P (1990>)	73 mm	71 mm
SKODA Felicia 5P (>1996)	76 mm	83 mm
SKODA Felicia 4P (1997>)	76 mm	83 mm
TOYOTA Aygo 5P (>2013)	58 mm	70 mm
TOYOTA Aygo 5P (2014>)	48 mm	72 mm
VW Golf II 3/5P (84-90)	93 mm	93 mm

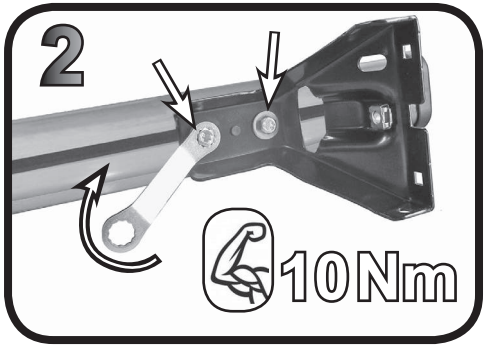

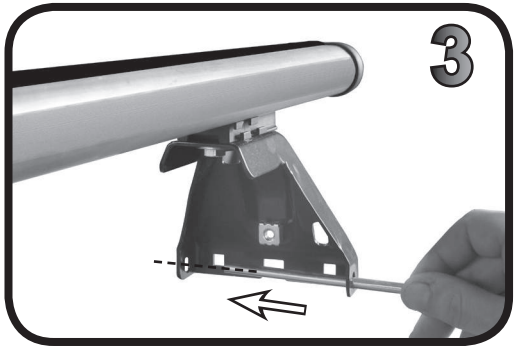

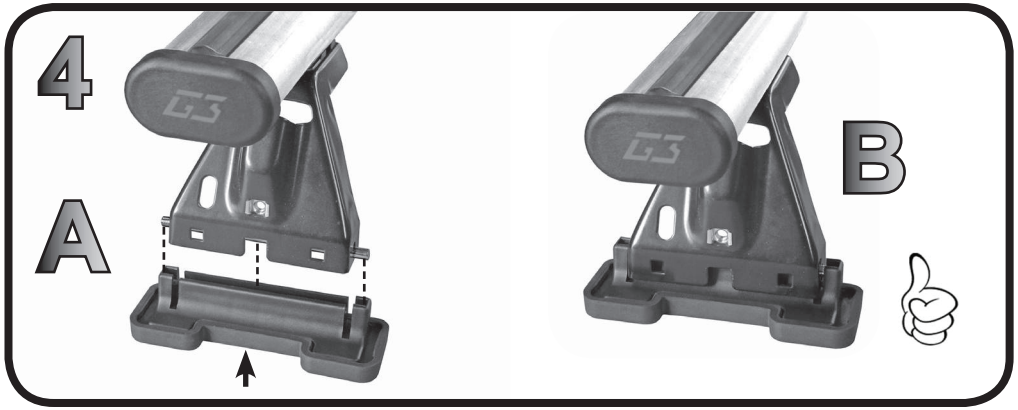

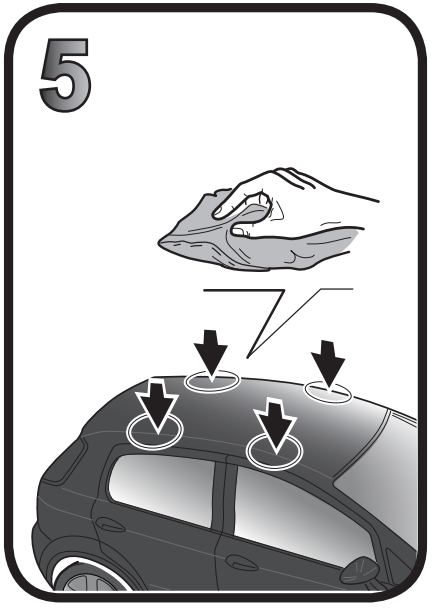

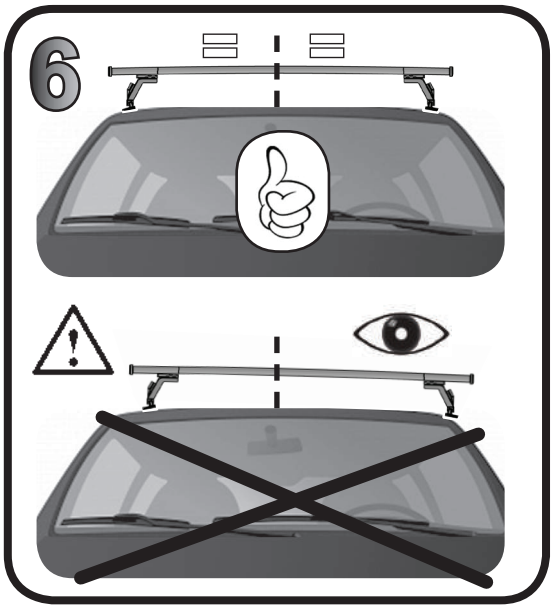

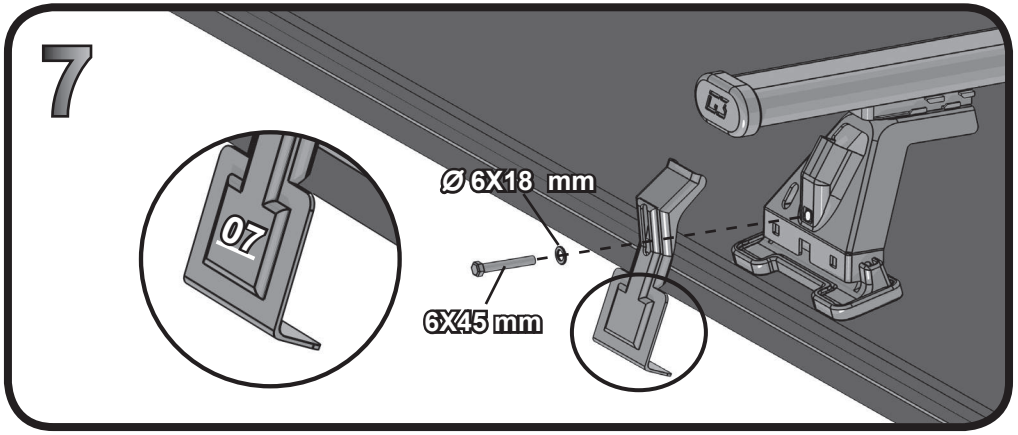

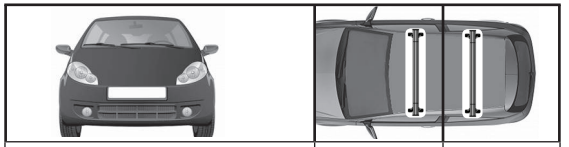

ALFA ROMEO 166 5P (1998>)	F: 250 mm	R: 350 mm
BMW Serie 3 coupè 2P (92-98)	F: 350 mm	R: 350 mm
CITROËN C1 5P (>2013)	F: 200 mm	R: 400 mm
CITROËN C1 5P (2014>)	F: 350 mm	R: 350 mm
HYUNDAI Gets 5P (2002>)	F: 300 mm	R: 400 mm
HYUNDAI i10 5P (08-13)	F: 200 mm	R: 400 mm
MAZDA 2 5P (04-07)	F: 250 mm	R: 450 mm
PEUGEOT 107 5P (2005>)	F: 200 mm	R: 400 mm
PEUGEOT 108 5P (2014>)	F: 350 mm	R: 350 mm
SKODA Felicia 5P (>1996)	F: 350 mm	R: 350 mm
SKODA Felicia 4P (1997>)	F: 300 mm	R: 300 mm
TOYOTA Aygo 5P (>2013)	F: 200 mm	R: 400 mm
TOYOTA Aygo 5P (2014>)	F: 350 mm	R: 350 mm
VW Golf II 3/5P (84-90)	F: 300 mm	R: 400 mm

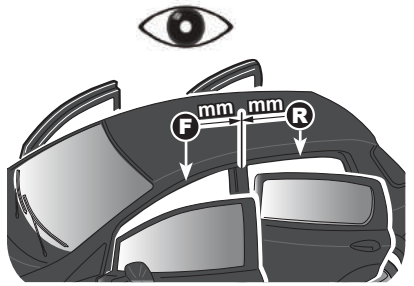

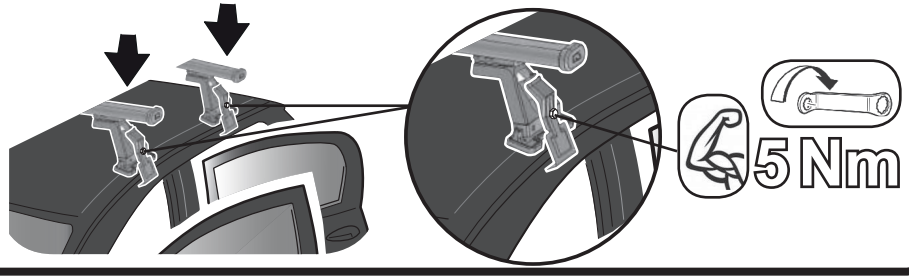

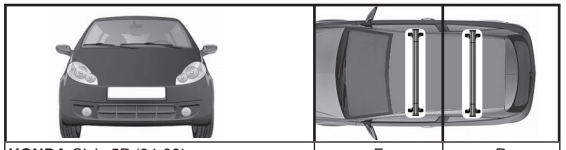

HONDA Civic 5P (94-00)	F	R
HONDA Concerto 5P (>1994)	F	R
INFINITY G37XS 4P (09-13)	F	R
ROVER 400-45 4/5P (1990>)	F	R

