68.034

ISTRUZIONI DI MONTAGGIO
FITTING INSTRUCTION
"Acciaio / Steel"

= 15 min.

1

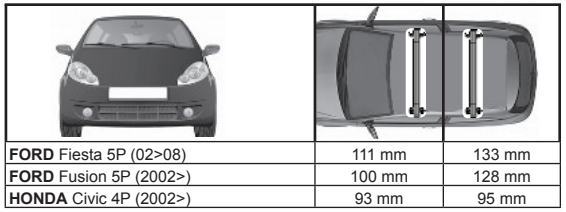

FORD Fiesta 5P (02>08)	111 mm	133 mm
FORD Fusion 5P (2002>)	100 mm	128 mm
HONDA Civic 4P (2002>)	93 mm	95 mm

2

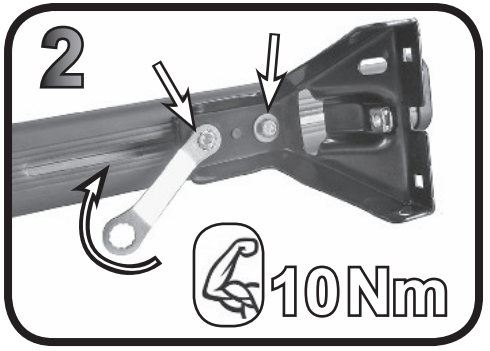

3

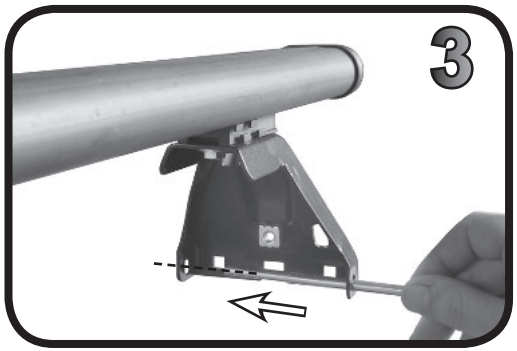

9

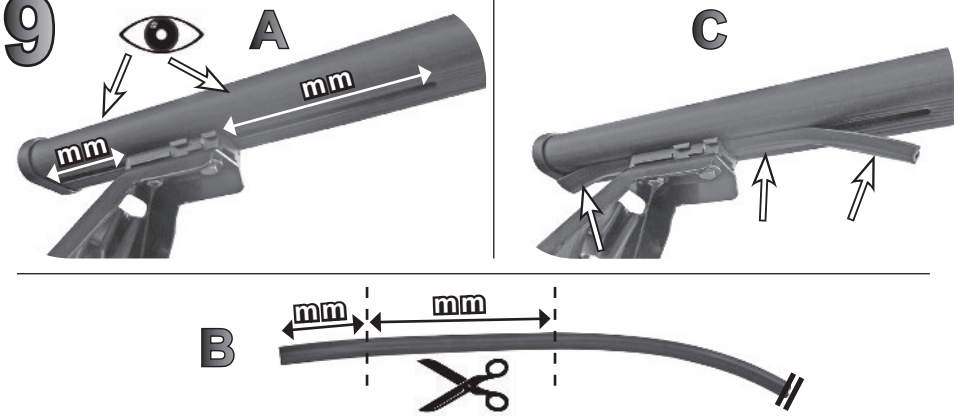

10

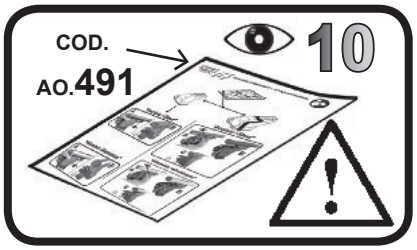

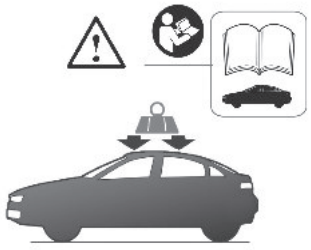



G3 Spa - via S. Allende, n 15
42020 Montecavolo di Quattro Castella
Reggio E. - Italy
Tel ++39 0522 880635
Fax ++39 0522 880306
www.g3spa.it - info@g3spa.it

COD. AO.300 / ACC
REV. 02

4

A



B



5

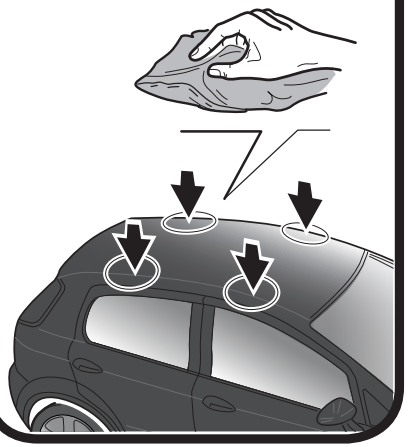

6

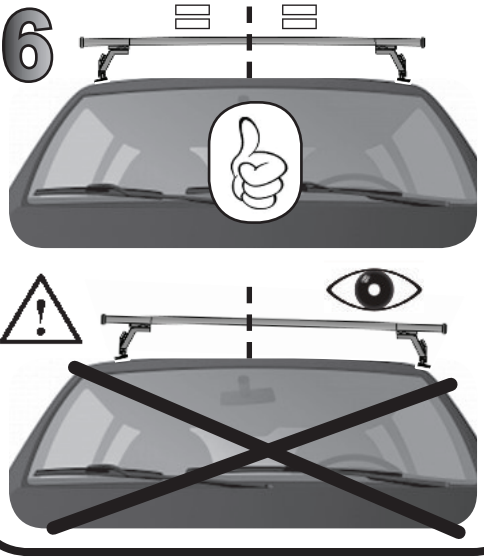

7

	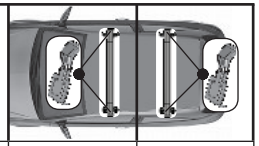	
FORD Fiesta 5P (02>08)	04	23
FORD Fusion 5P (2002>)	04	23
HONDA Civic 4P (2002>)	04	23

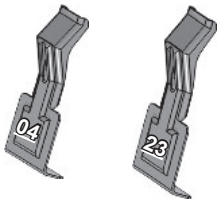

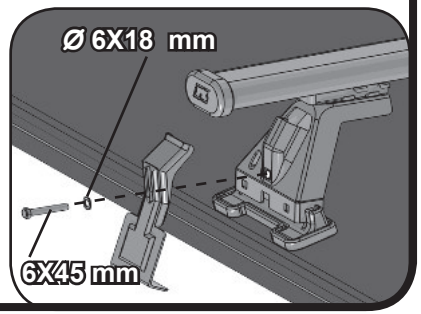

	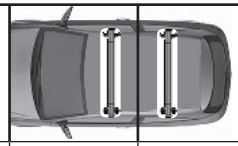	
FORD Fiesta 5P (02>08)	F: 250 mm	R: 450 mm
FORD Fusion 5P (2002>)	F: 250 mm	R: 450 mm
HONDA Civic 4P (2002>)	F: 270 mm	R: 330 mm

8

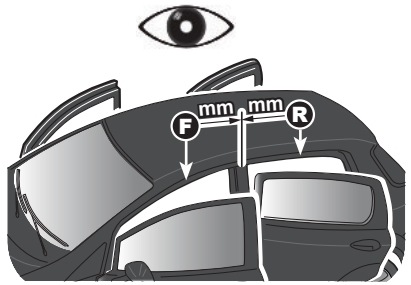

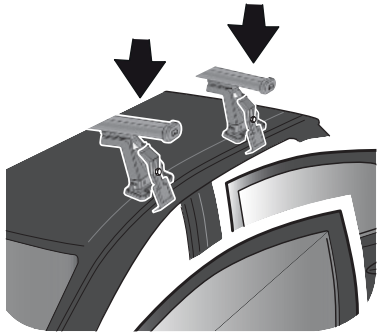

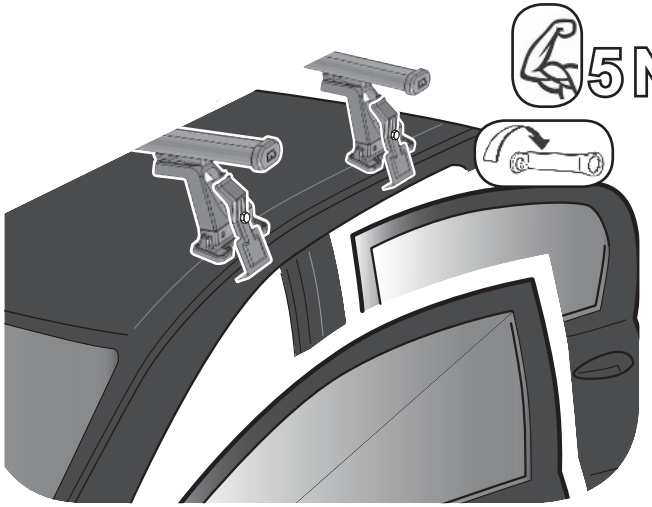

68.034

ISTRUZIONI DI MONTAGGIO
FITTING INSTRUCTION
"Alluminio / Aluminium"

= 15 min.

1

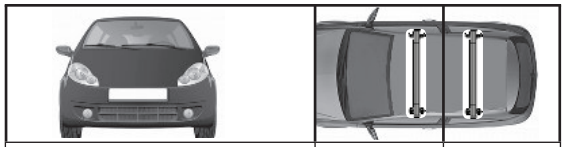

FORD Fiesta 5P (02>08)	111 mm	133 mm
FORD Fusion 5P (2002>)	100 mm	128 mm
HONDA Civic 4P (2002>)	93 mm	95 mm

2

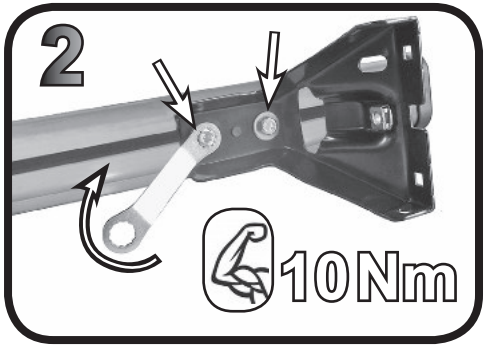

3

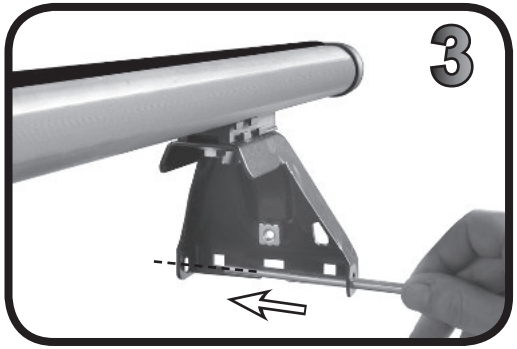

9

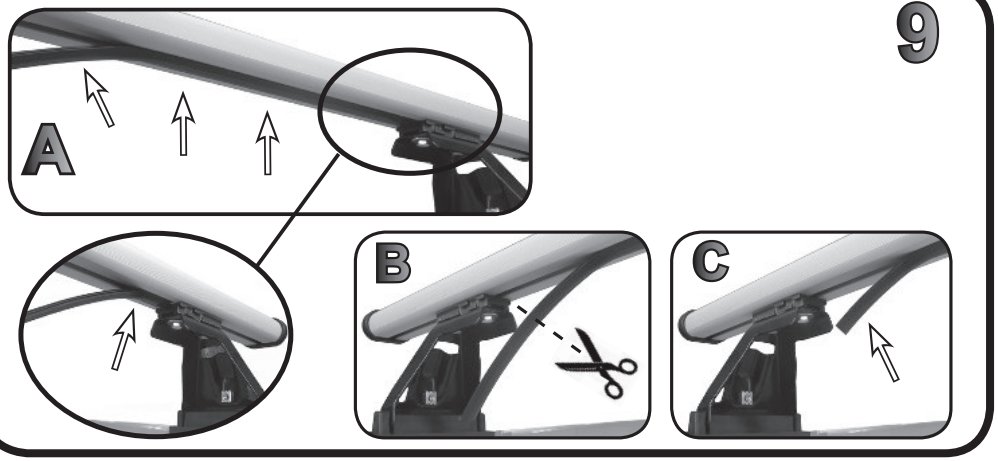

10

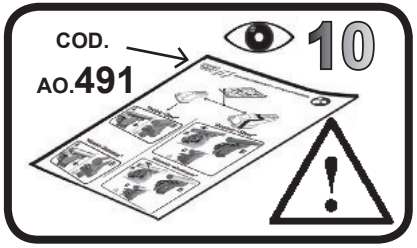

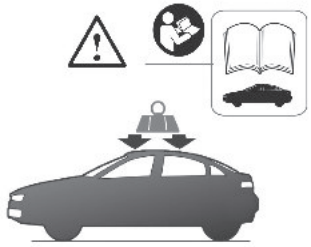

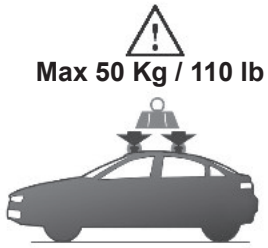

G3 Spa - via S. Allende, n 15
42020 Montecavolo di Quattro Castella
Reggio E. - Italy
Tel ++39 0522 880635
Fax ++39 0522 880306
www.g3spa.it - info@g3spa.it

COD. AO.300 / ALL
REV. 02

4



5

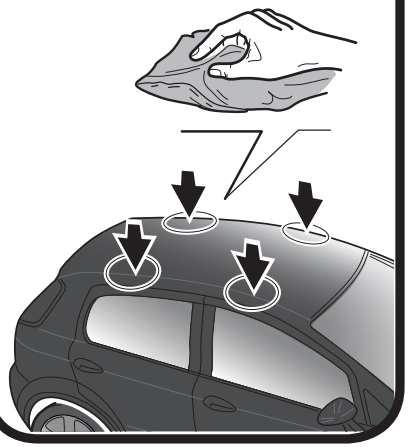

6

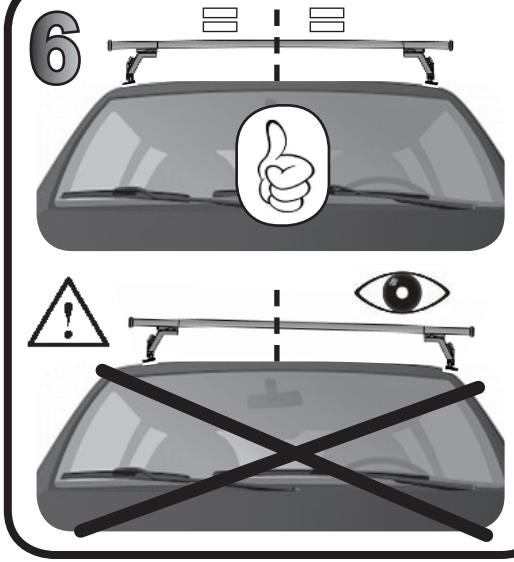

7

FORD Fiesta 5P (02>08)	04	23
FORD Fusion 5P (2002>)	04	23
HONDA Civic 4P (2002>)	04	23

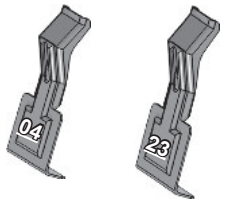

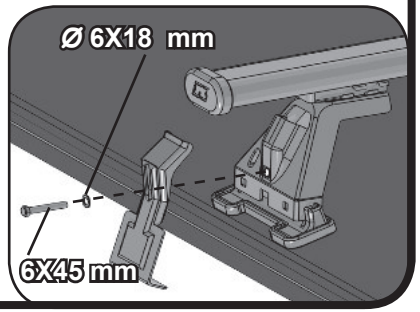

8

FORD Fiesta 5P (02>08)	F: 250 mm	R: 450 mm
FORD Fusion 5P (2002>)	F: 250 mm	R: 450 mm
HONDA Civic 4P (2002>)	F: 270 mm	R: 330 mm

