68.066

ISTRUZIONI DI MONTAGGIO
FITTING INSTRUCTION
"Acciaio / Steel"

= 15 min.

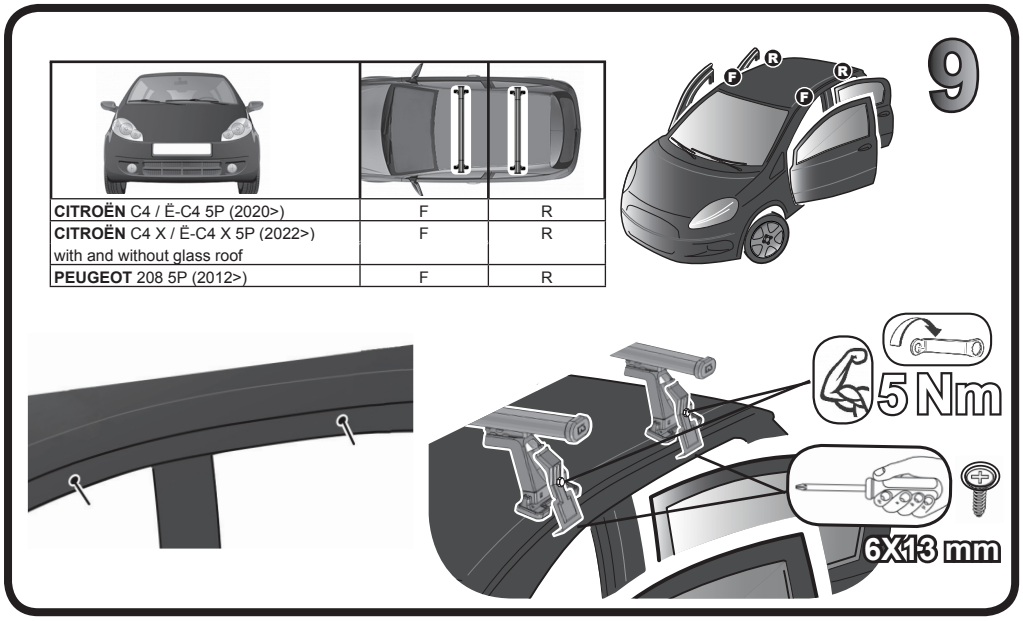

CITROËN C4 / Ë-C4 5P (2020>)	F	R
CITROËN C4 X / Ë-C4 X 5P (2022>) with and without glass roof	F	R
PEUGEOT 208 5P (2012>)	F	R

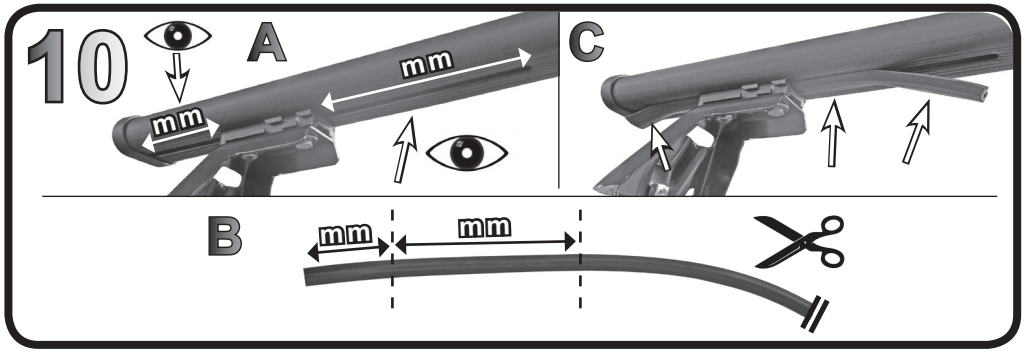

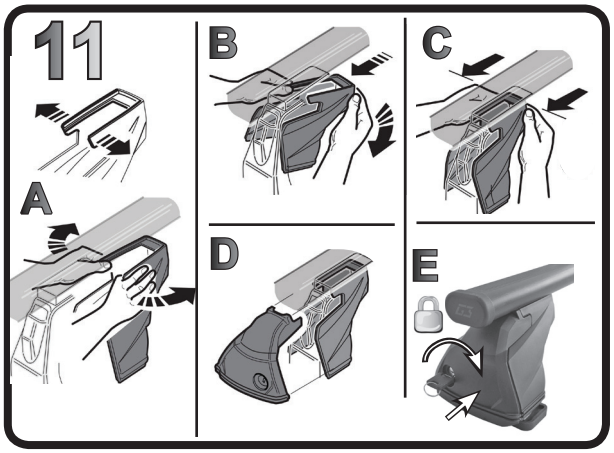

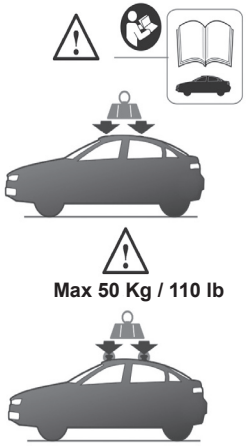

G3 Spa - via S. Allende, n 15
42020 Montecavolo di Quattro Castella
Reggio E: - Italy
Tel ++39 0522 880635
Fax ++39 0522 880306
www.g3spa.it - info@g3spa.it

COD. AO.339 / ACC

REV. 04

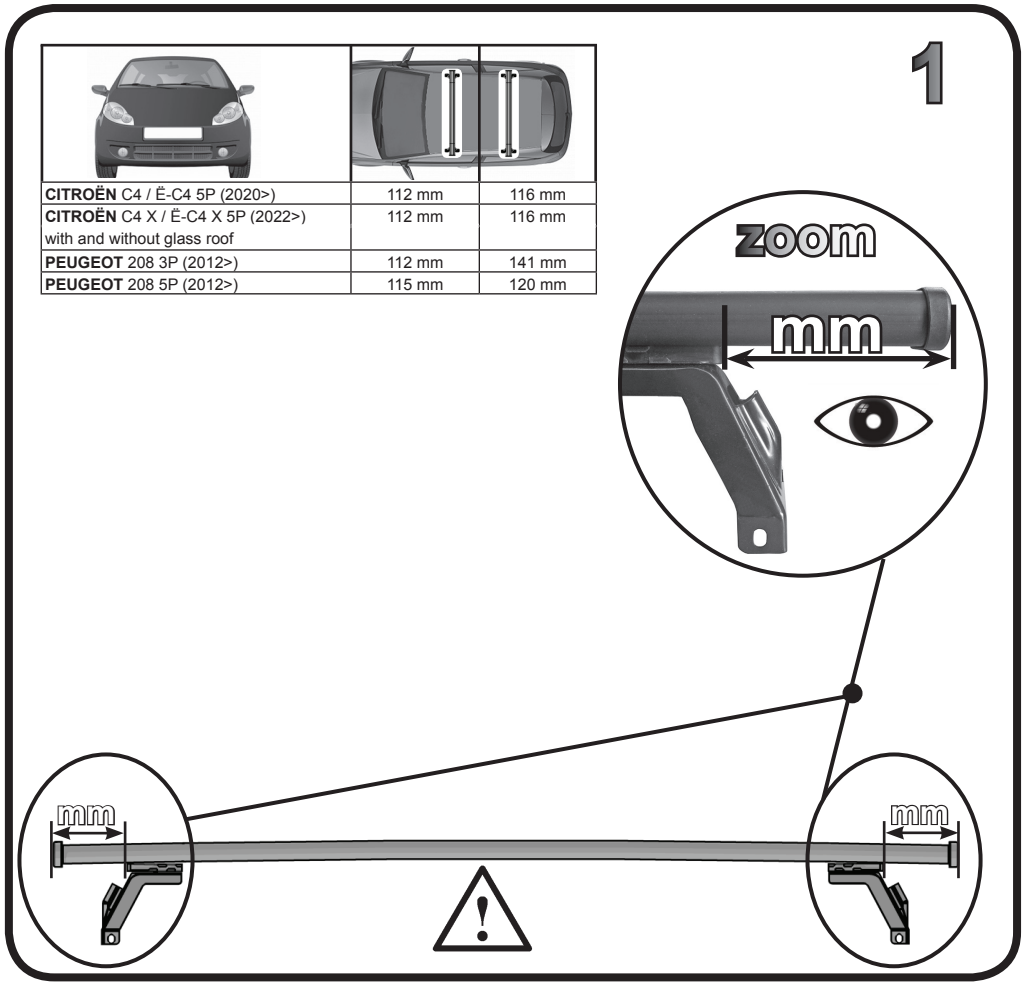

CITROËN C4 / Ë-C4 5P (2020>)	112 mm	116 mm
CITROËN C4 X / Ë-C4 X 5P (2022>) with and without glass roof	112 mm	116 mm
PEUGEOT 208 3P (2012>)	112 mm	141 mm
PEUGEOT 208 5P (2012>)	115 mm	120 mm

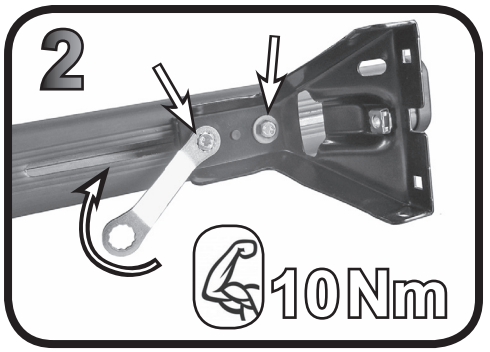

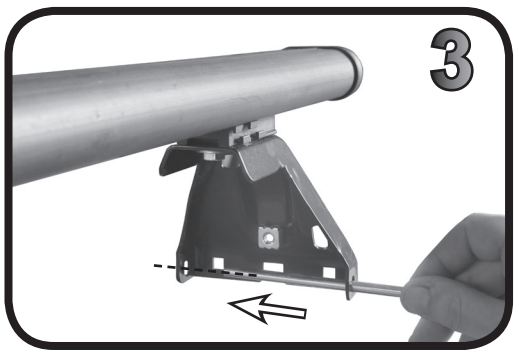

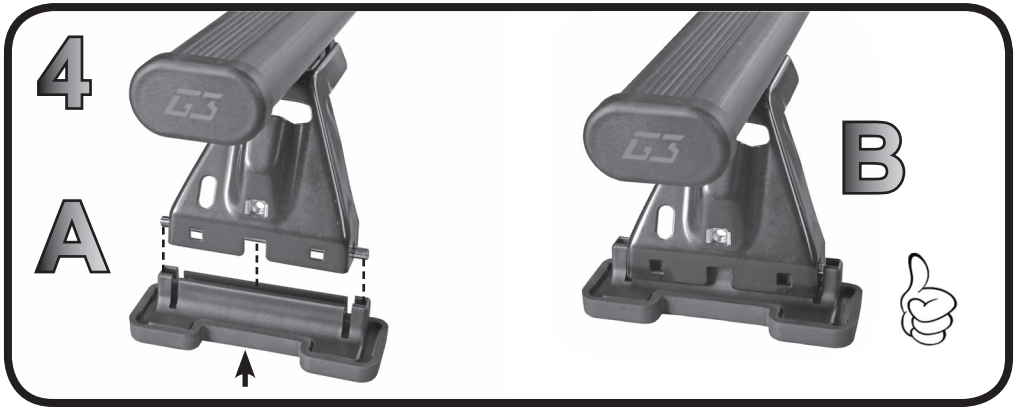

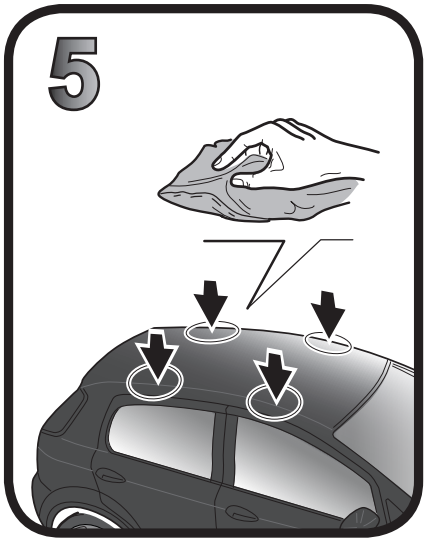

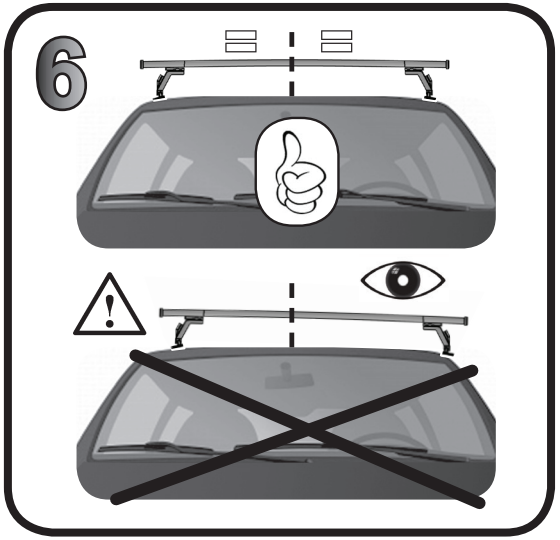

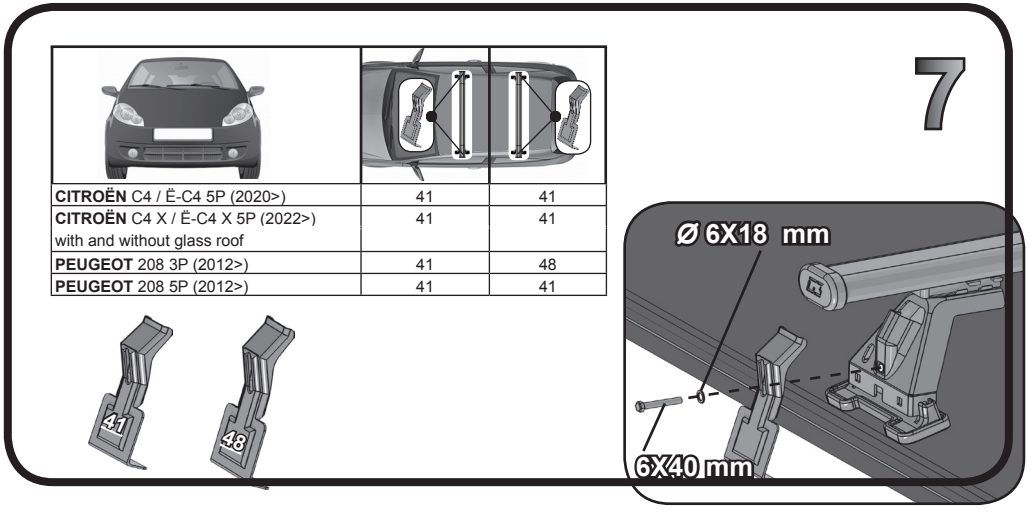

CITROËN C4 / Ë-C4 5P (2020>)	41	41
CITROËN C4 X / Ë-C4 X 5P (2022>) with and without glass roof	41	41
PEUGEOT 208 3P (2012>)	41	48
PEUGEOT 208 5P (2012>)	41	41

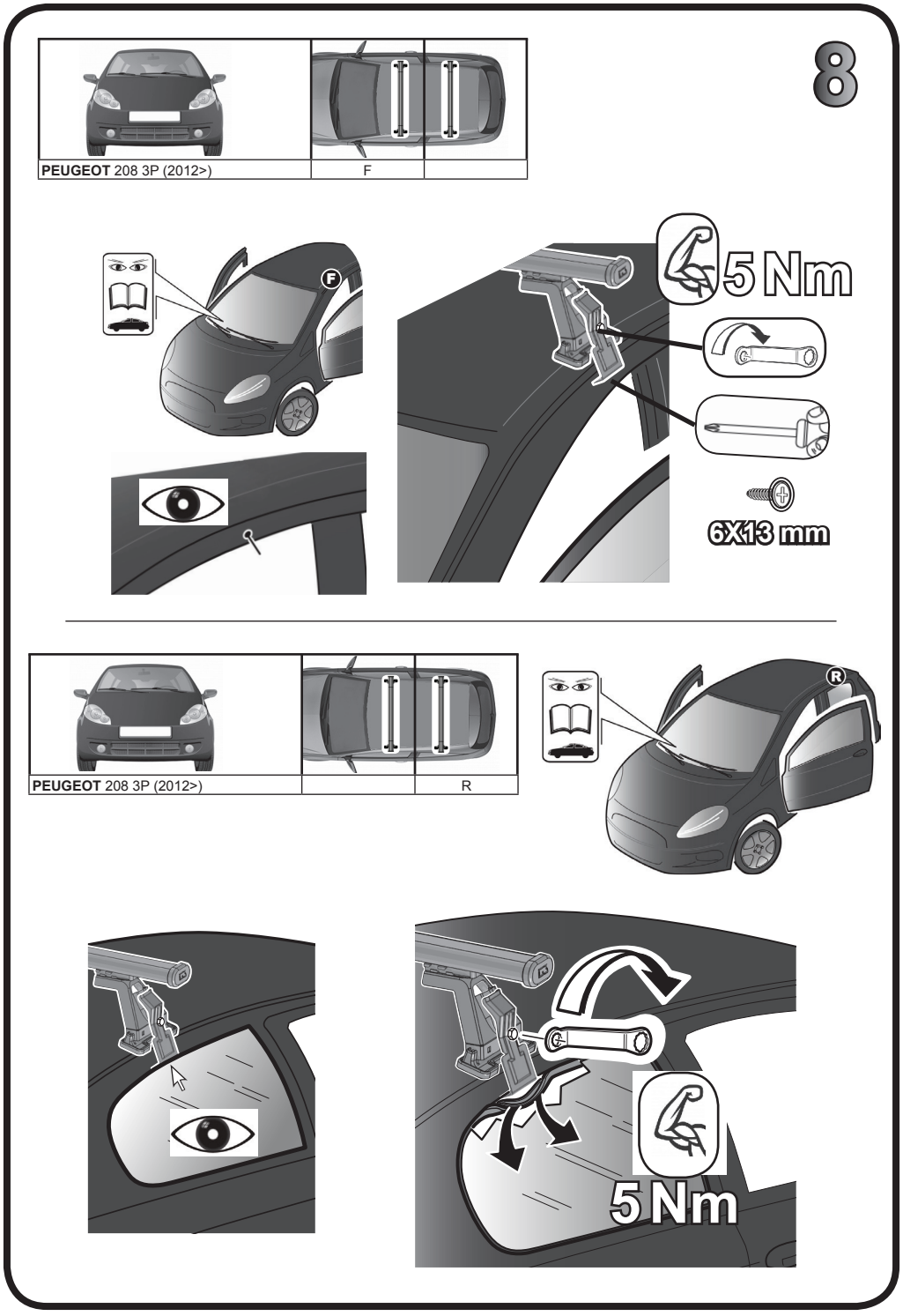

68.066

ISTRUZIONI DI MONTAGGIO
FITTING INSTRUCTION
"Alluminio / Aluminium"

= 15 min.



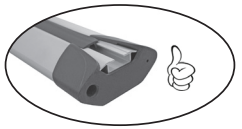

9

CITROËN C4 / Ë-C4 5P (2020>)	F	R
CITROËN C4 X / Ë-C4 X 5P (2022>) with and without glass roof	F	R
PEUGEOT 208 5P (2012>)	F	R

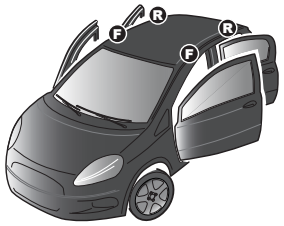



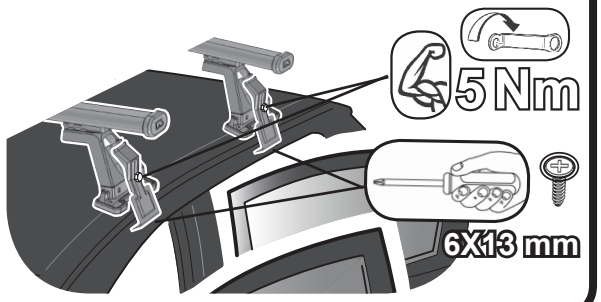

10

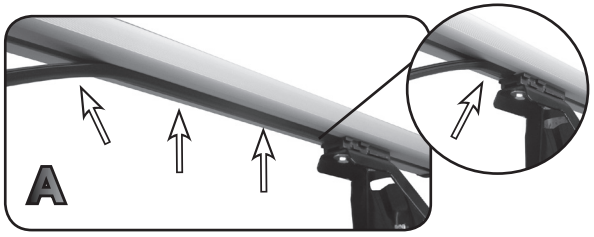

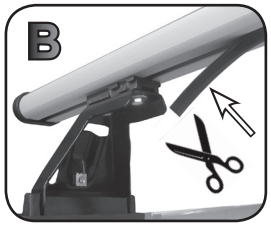

11

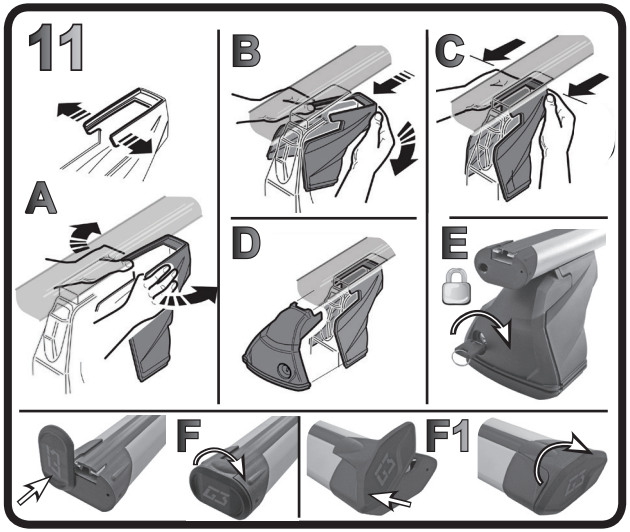

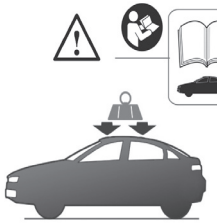



G3 Spa - via S. Allende, n 15
42020 Montecavolo di Quattro Castella
Reggio E. - Italy
Tel ++39 0522 880635
Fax ++39 0522 880306
www.g3spa.it - info@g3spa.it

COD. AO.339 / ALL
REV. 04

1

CITROËN C4 / Ë-C4 5P (2020>)	112 mm	116 mm
CITROËN C4 X / Ë-C4 X 5P (2022>) with and without glass roof	112 mm	116 mm
PEUGEOT 208 3P (2012>)	112 mm	141 mm
PEUGEOT 208 5P (2012>)	115 mm	120 mm

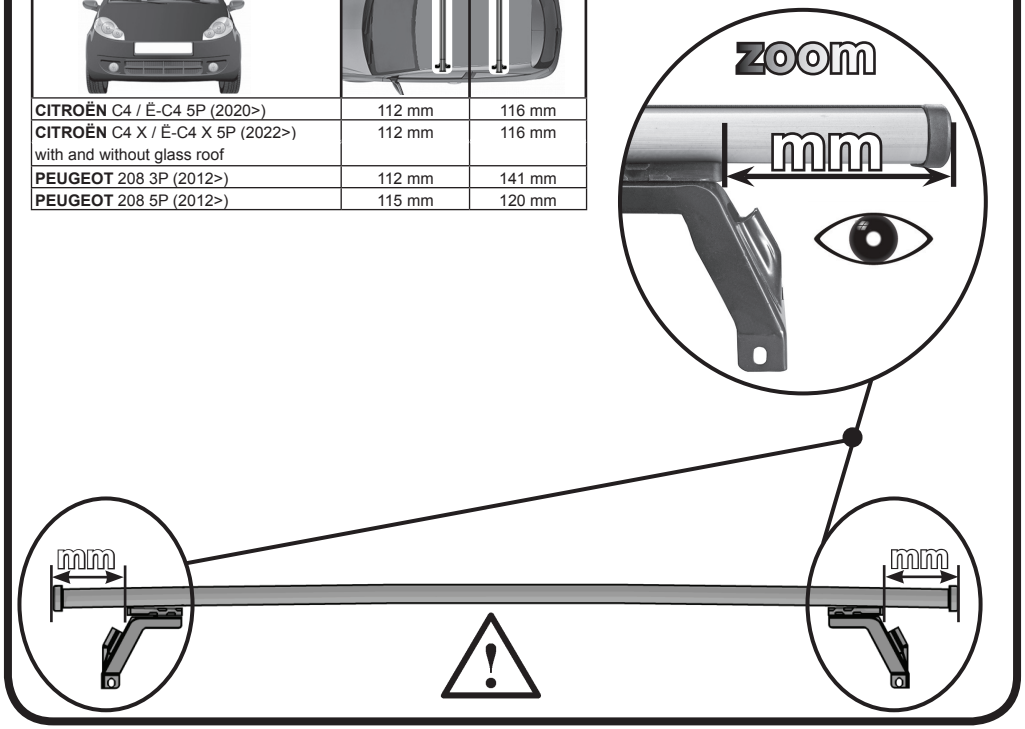

2

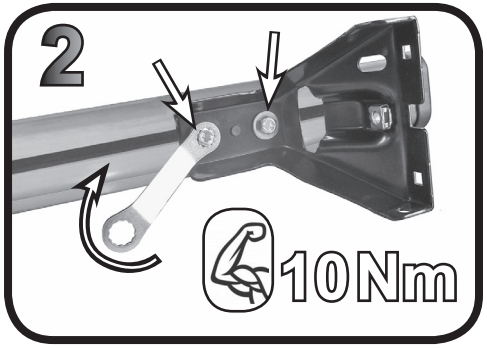

3

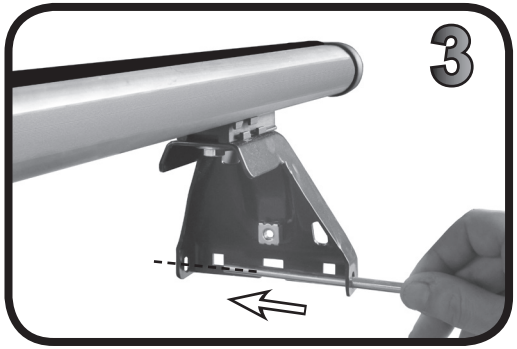

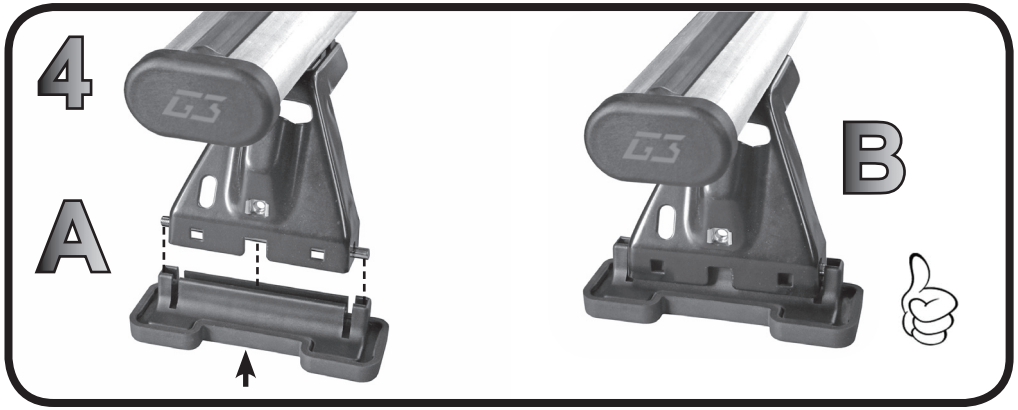

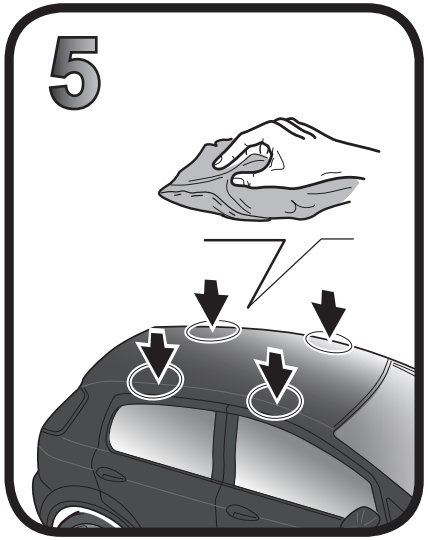

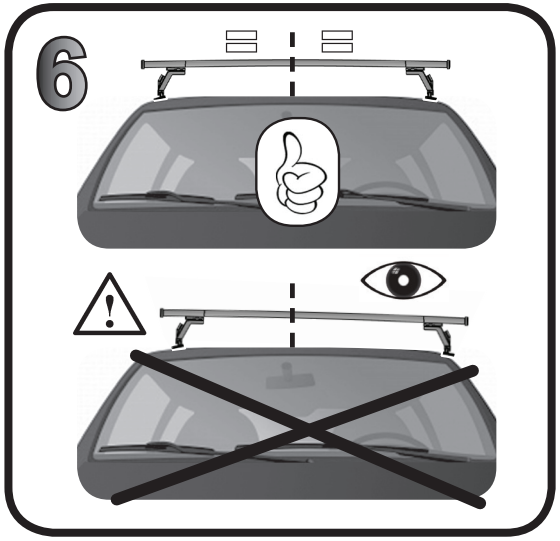

CITROËN C4 / Ë-C4 5P (2020>)	41	41
CITROËN C4 X / Ë-C4 X 5P (2022>) with and without glass roof	41	41
PEUGEOT 208 3P (2012>)	41	48
PEUGEOT 208 5P (2012>)	41	41

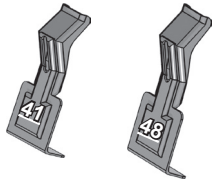

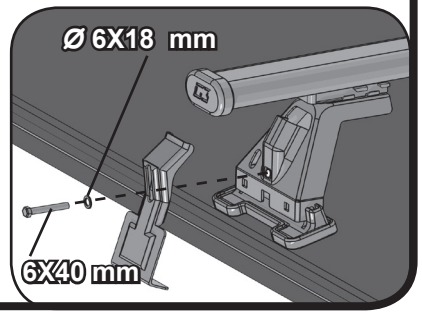

PEUGEOT 208 3P (2012>)	F	

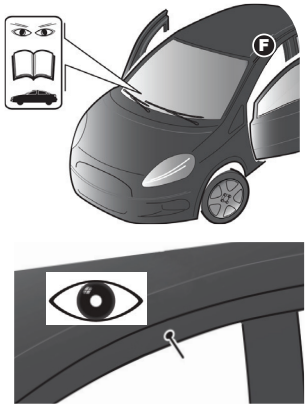

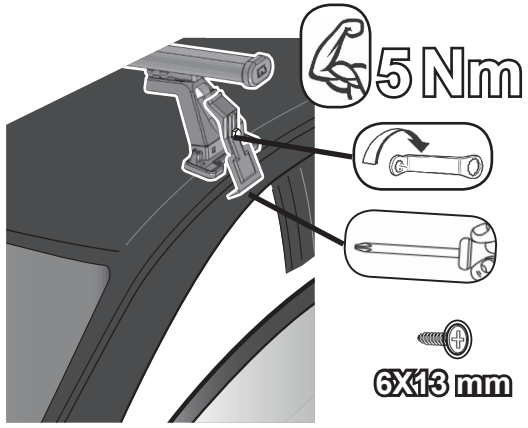

PEUGEOT 208 3P (2012>)		R

