68.080

ISTRUZIONI DI MONTAGGIO
FITTING INSTRUCTION
"Acciaio / Steel"

= 15 min.

1

AUDI Q2 5P (2016>)	101 mm	114 mm
FORD Mondeo IV 5P (2014>) con e senza tetto in vetro / with and without glass roof	47 mm	74 mm
SKODA Superb 5P (2015>)	79 mm	94 mm
VW Passat 4P (2015>)	69 mm	86 mm

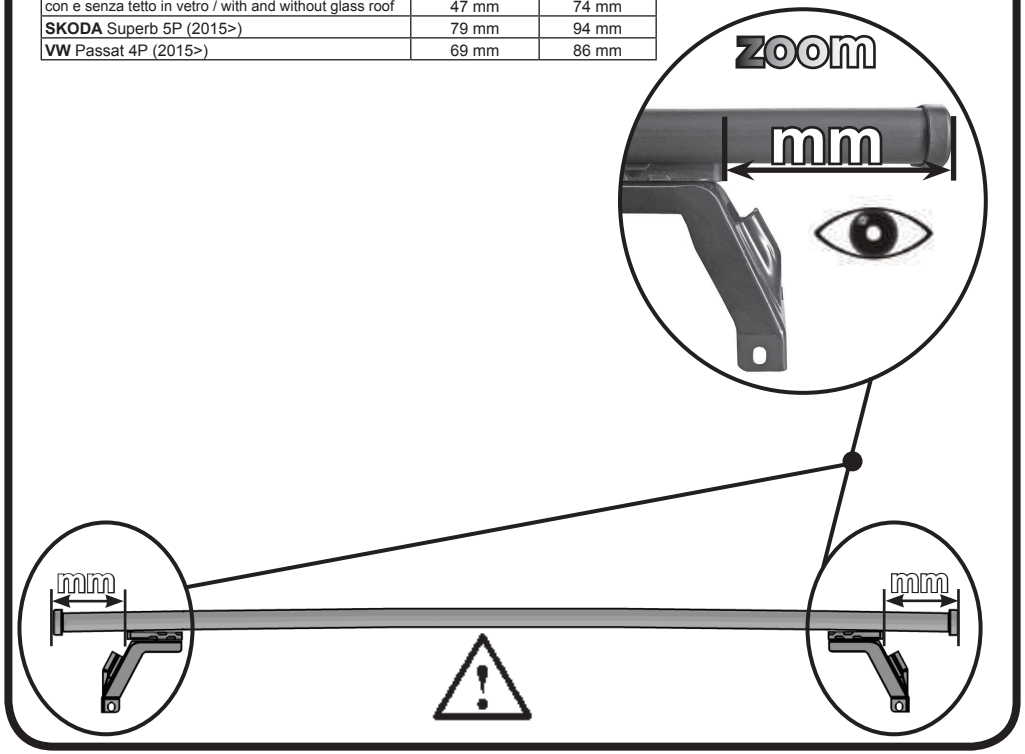

2

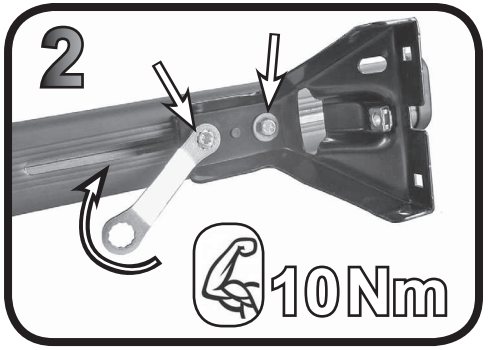

3

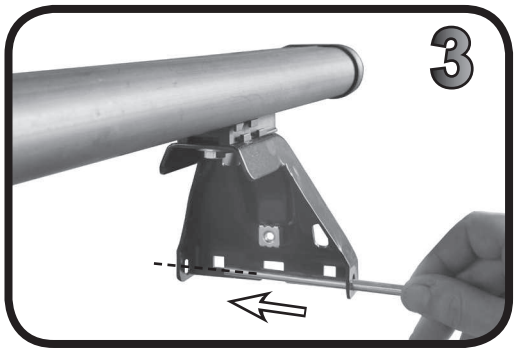

10

VW Passat 4P (2015>)	F	R

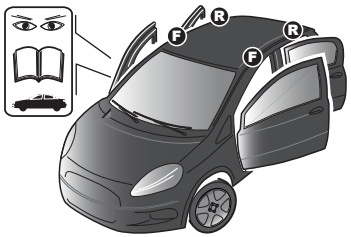



11

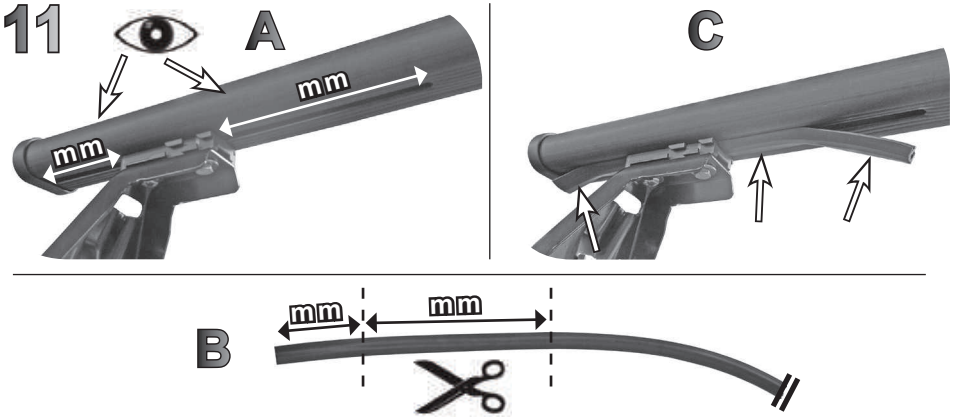

12

COD. AO.491

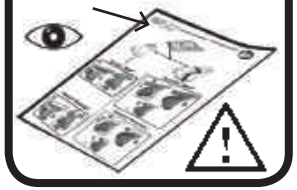

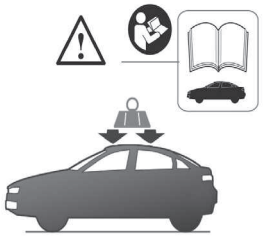



G3 Spa - via S. Allende, n 15
42020 Montecavolo di Quattro Castella
Reggio E. - Italy
Tel ++39 0522 8808335
Fax ++39 0522 8803306
www.g3spa.it - info@g3spa.it

COD. AO.387 / ACC

REV. 04

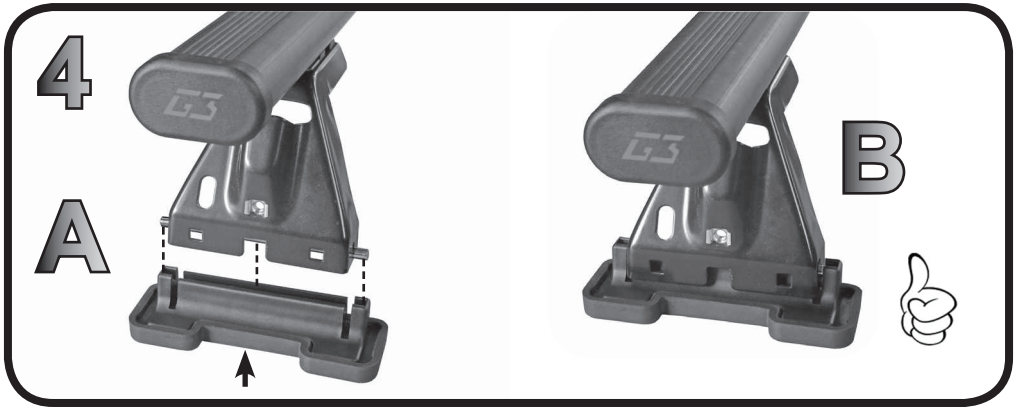
4
A
B

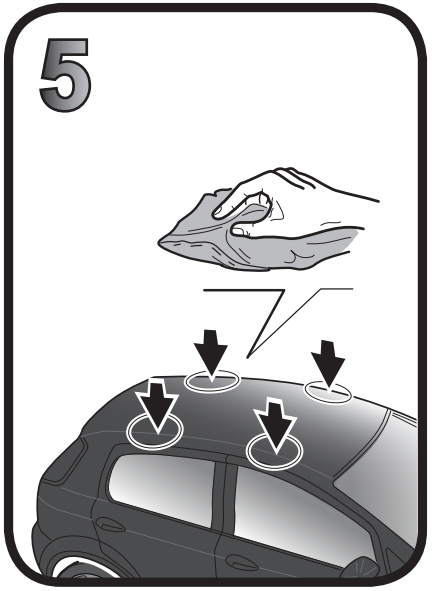
5

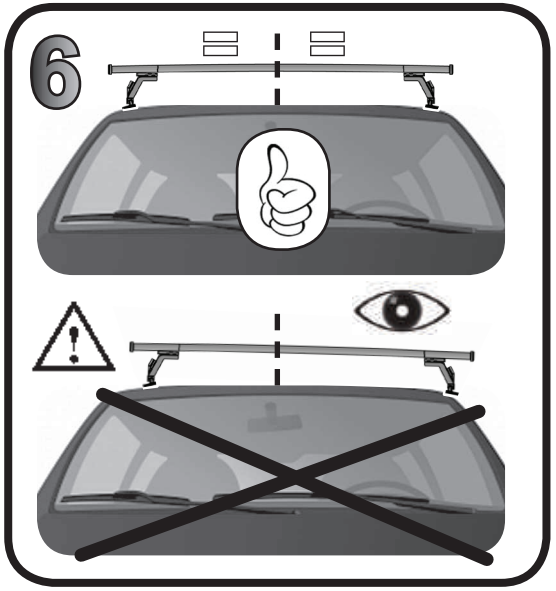
6

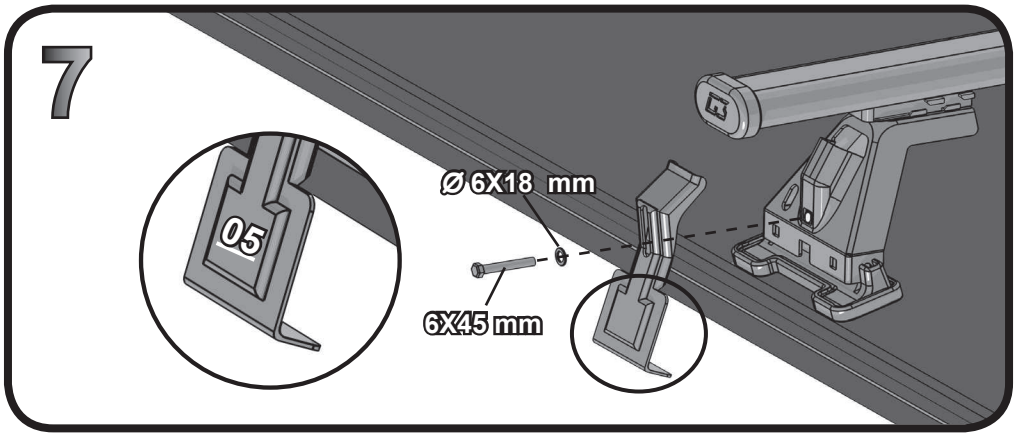
7
05
Ø 6X18 mm
6X45 mm

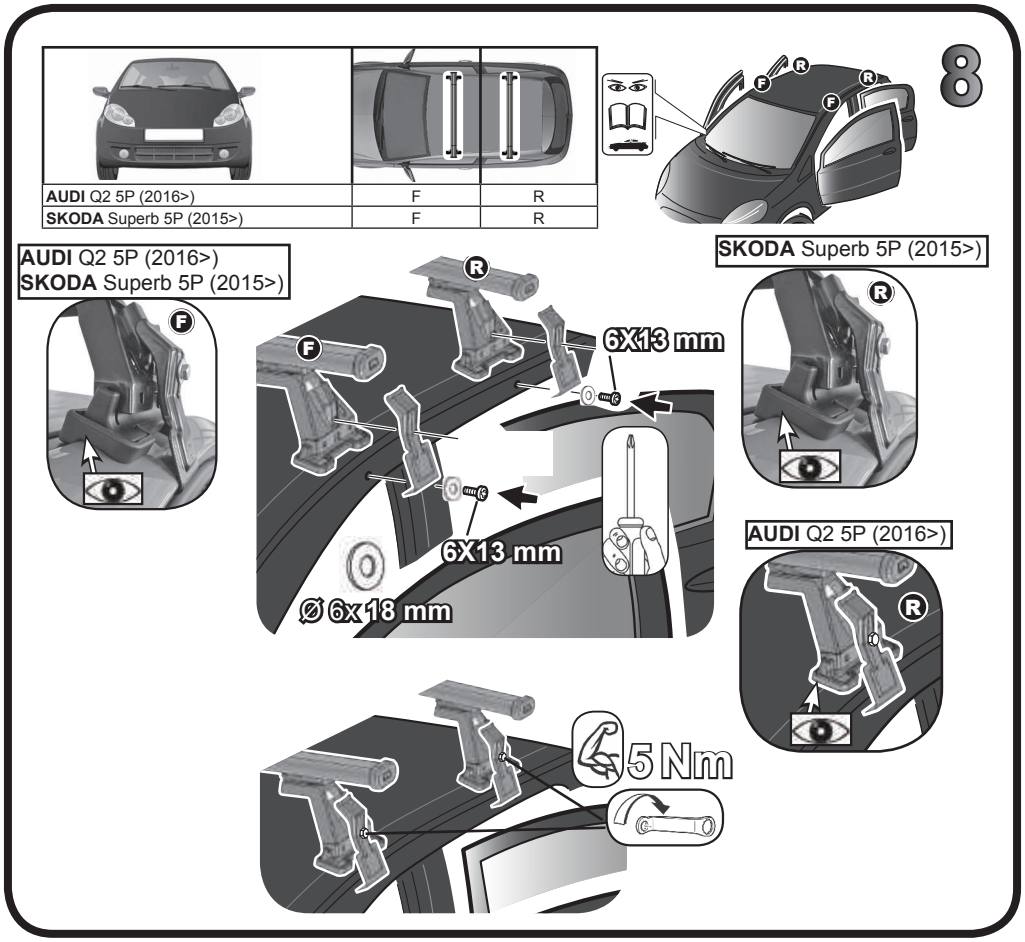
8
AUDI Q2 5P (2016>) F R
SKODA Superb 5P (2015>) F R
AUDI Q2 5P (2016>)
SKODA Superb 5P (2015>)
SKODA Superb 5P (2015>)
6X13 mm
6X13 mm
Ø 6x18 mm
AUDI Q2 5P (2016>)
5 Nm

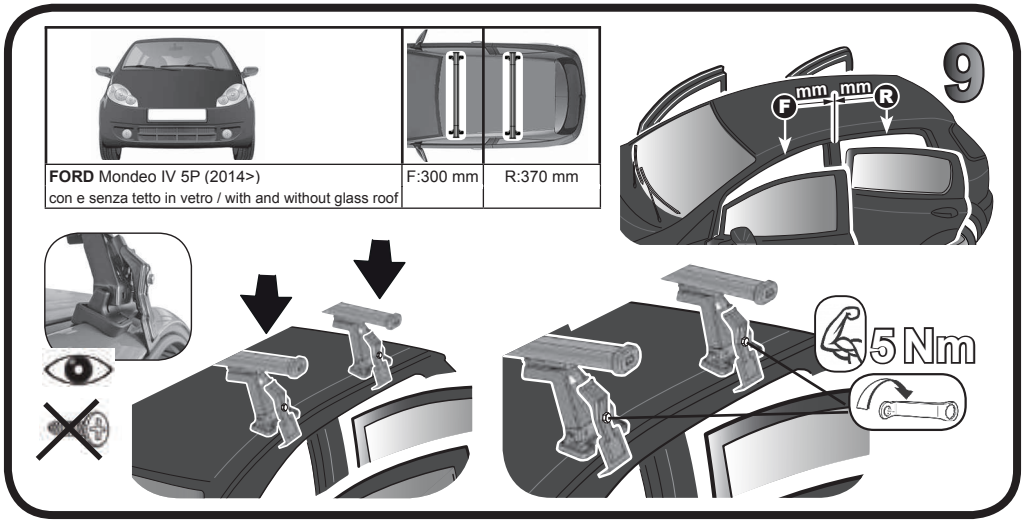
9
FORD Mondeo IV 5P (2014>)
con e senza tetto in vetro / with and without glass roof
F:300 mm
R:370 mm
mm
mm
5 Nm

68.080

ISTRUZIONI DI MONTAGGIO
FITTING INSTRUCTION
"Alluminio / Aluminium"

= 15 min.

1

AUDI Q2 5P (2016>)	101 mm	114 mm
FORD Mondeo IV 5P (2014>) con e senza tetto in vetro / with and without glass roof	47 mm	74 mm
SKODA Superb 5P (2015>)	79 mm	94 mm
VW Passat 4P (2015>)	69 mm	86 mm

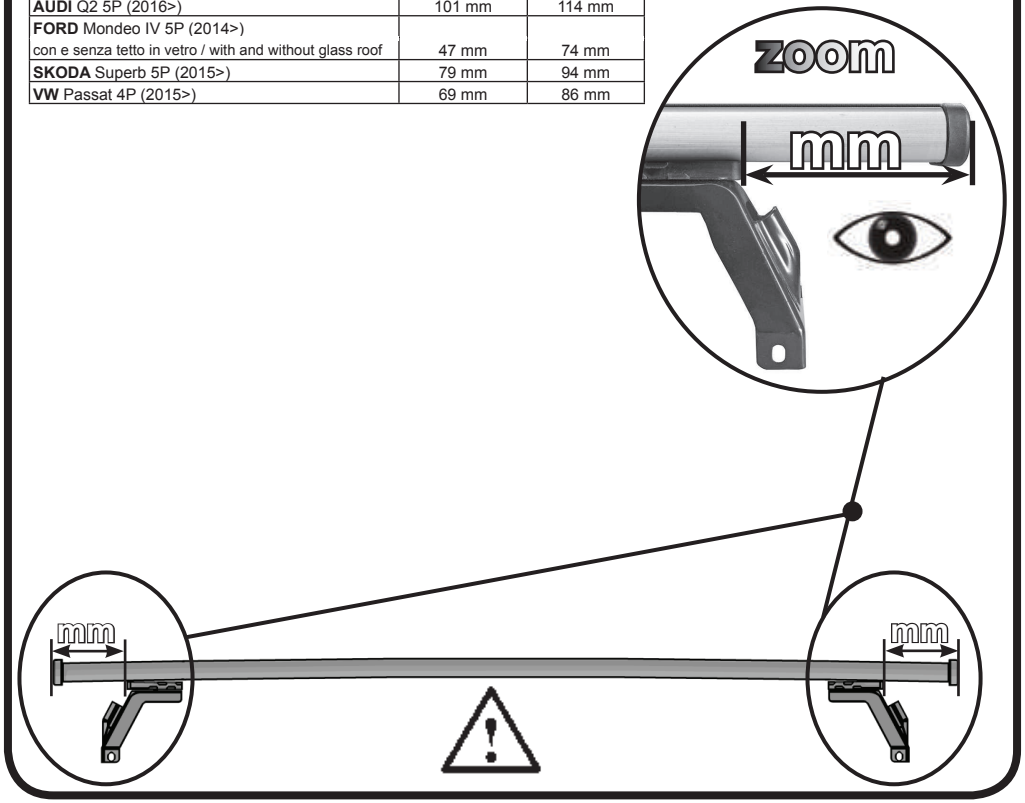

2

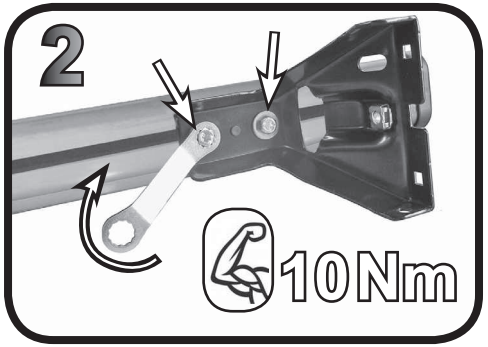

3

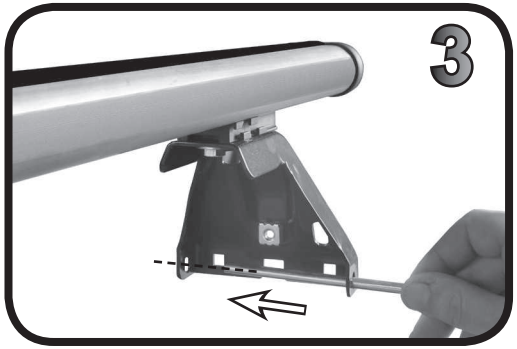

10

VW Passat 4P (2015>)	F	R

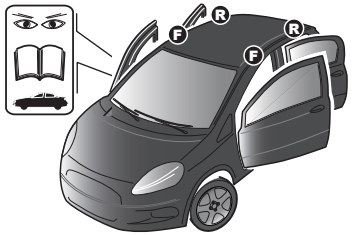



5 Nm

11

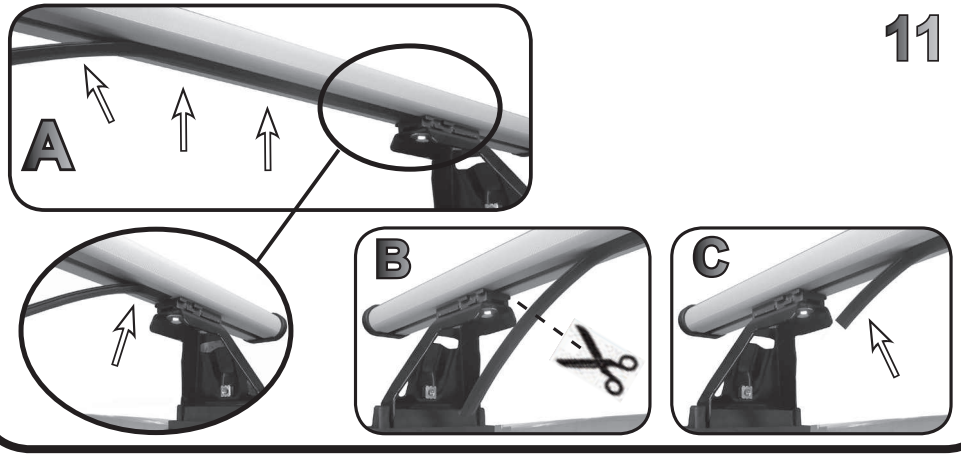

12

COD. AO.491

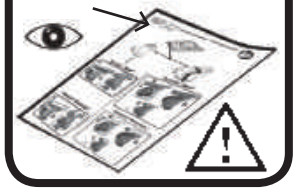

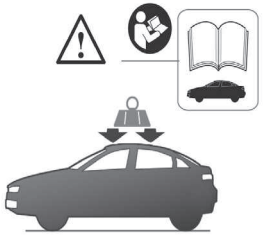



G3 Spa - via S. Allende, n 15
42020 Montecavolo di Quattro Castella
Reggio E. - Italy
Tel ++39 0522 8808035
Fax ++39 0522 8803061
www.g3spa.it - info@g3spa.it

COD. AO.387 / ALL

REV. 04

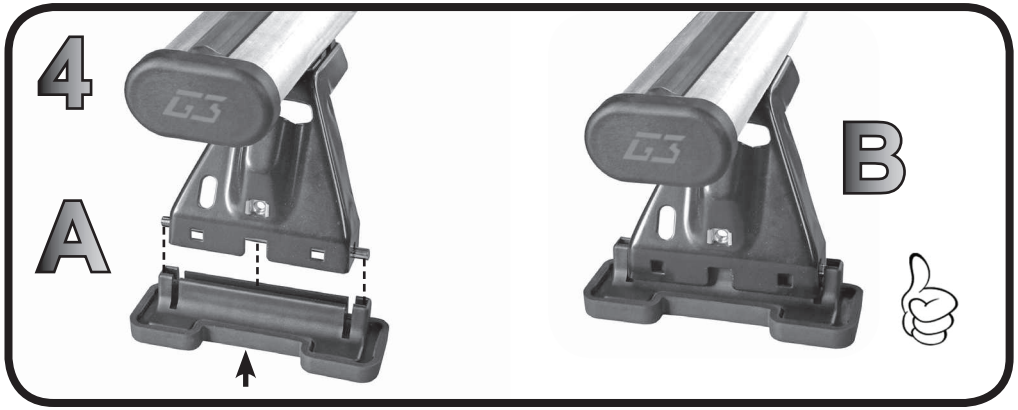
4
A
B

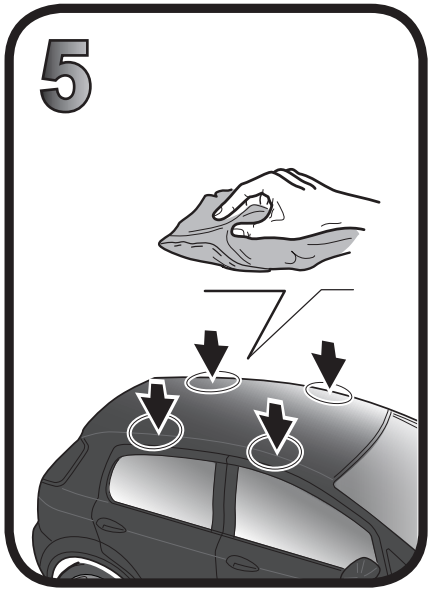
5

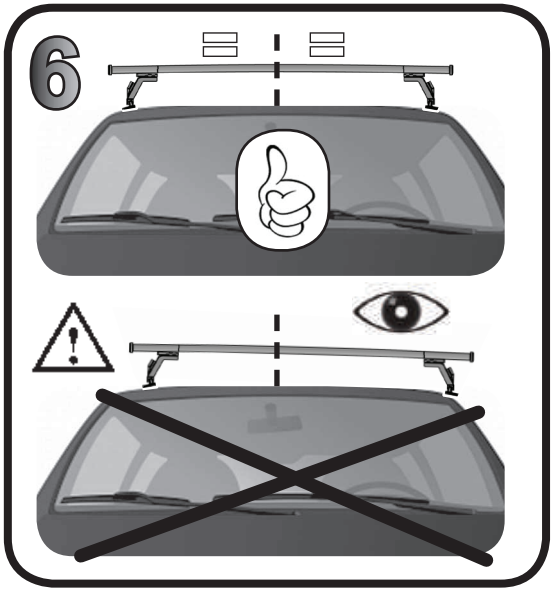
6

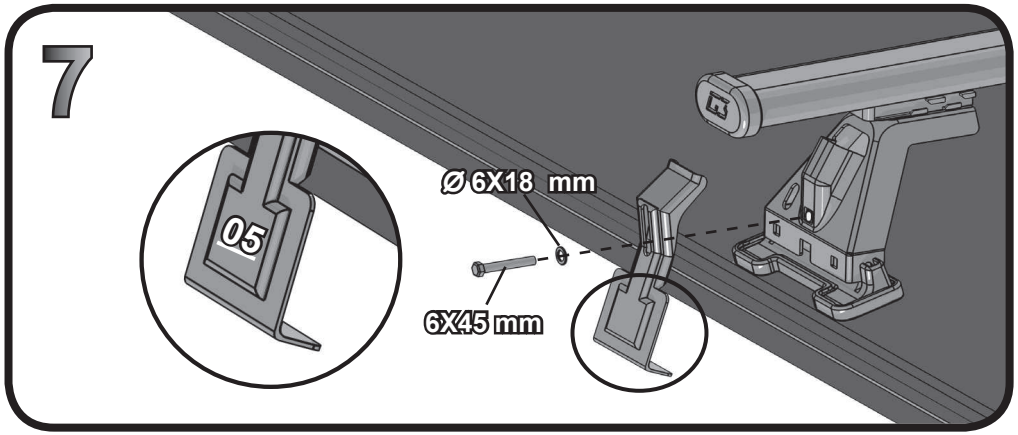
7
05
Ø 6X18 mm
6X45 mm

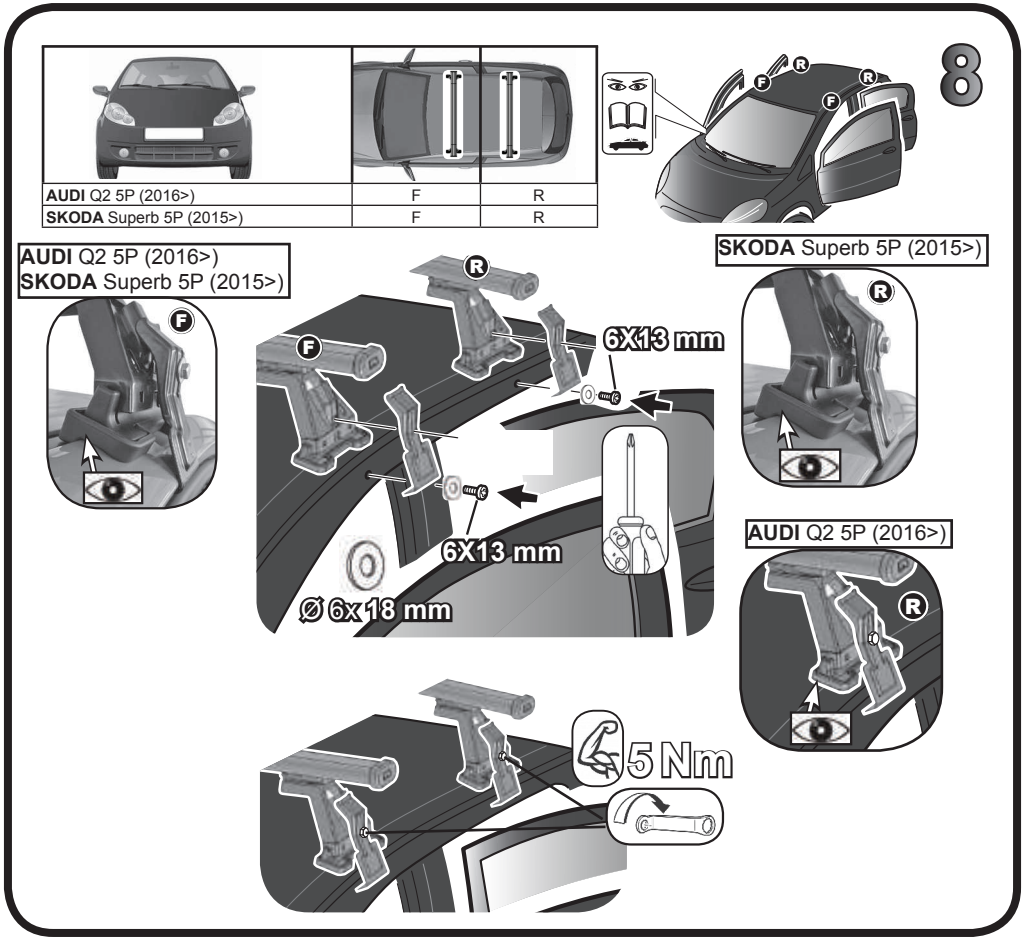
8
AUDI Q2 5P (2016>) F R
SKODA Superb 5P (2015>) F R
AUDI Q2 5P (2016>)
SKODA Superb 5P (2015>)
SKODA Superb 5P (2015>)
6X13 mm
6X13 mm
Ø 6x18 mm
AUDI Q2 5P (2016>)
5 Nm

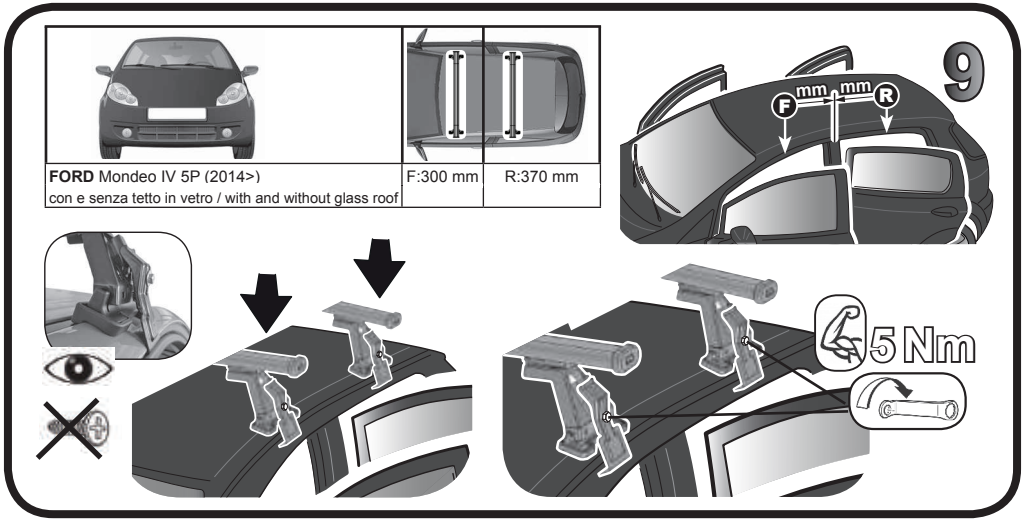
9
FORD Mondeo IV 5P (2014>)
con e senza tetto in vetro / with and without glass roof
F:300 mm
R:370 mm
mm
mm
5 Nm