

K9.60.023.01:

(x4)

Ø6x12 mm / Cod. AG.132

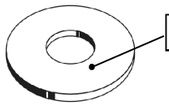

(x4)

6x16 mm / Cod. AG.437

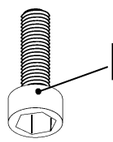

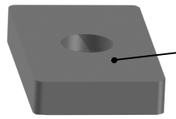

(x4)

15x25x4mm /Cod. AG.323

made in italy

G3 Spa - via S. Allende, n 15
42020 Montecavolo di Quattro Castella
Reggio E: - Italy
Tel ++39 0522 880635
Fax ++39 0522 880306
www.g3spa.it - info@g3spa.it

COD. AO.349
REV. 01

69.106
69.107
69.108
69.109

I : Istruzioni di montaggio
GB : Fitting instruction
D : Montageanleitung
F: Instructions de montage
E: Instrucciones de montaje

made in italy

1

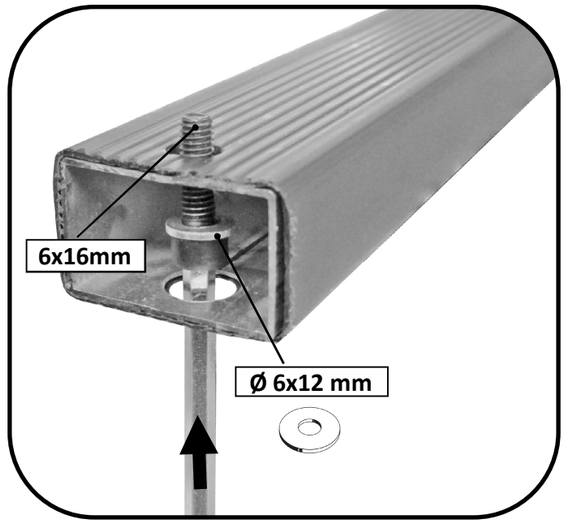

2



4

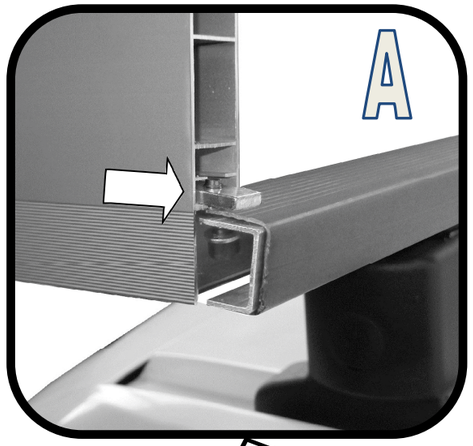

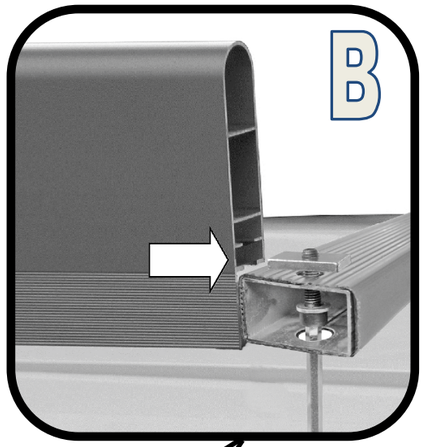

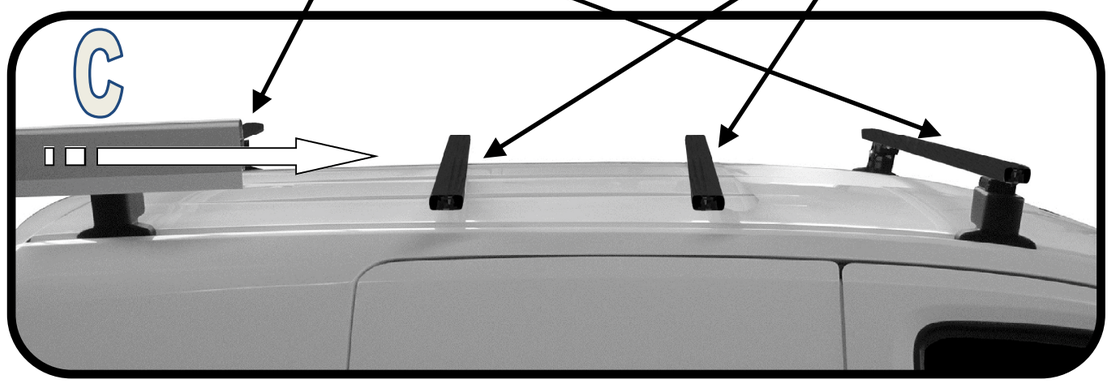

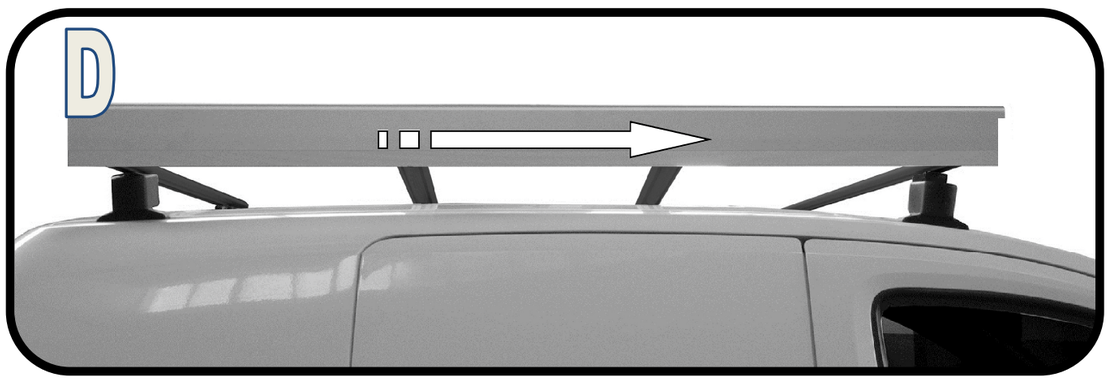

x 2

5

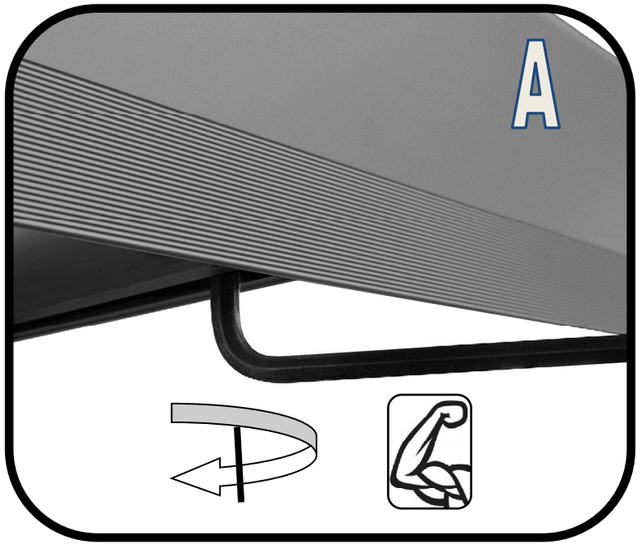

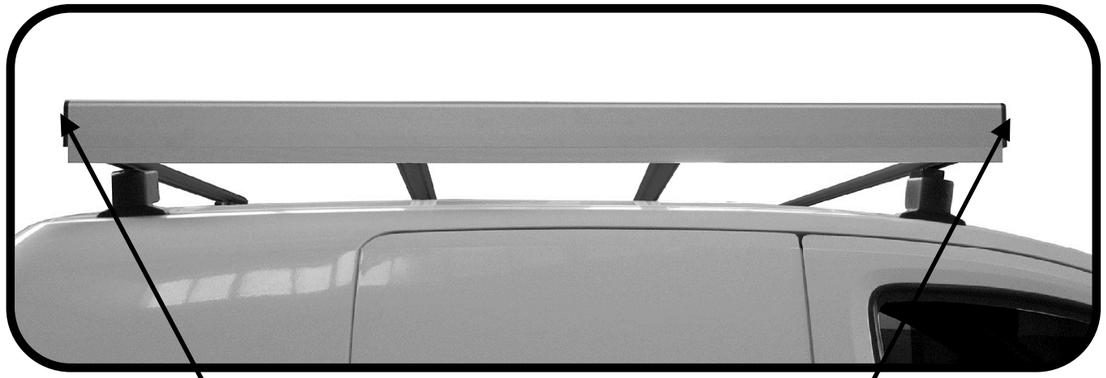

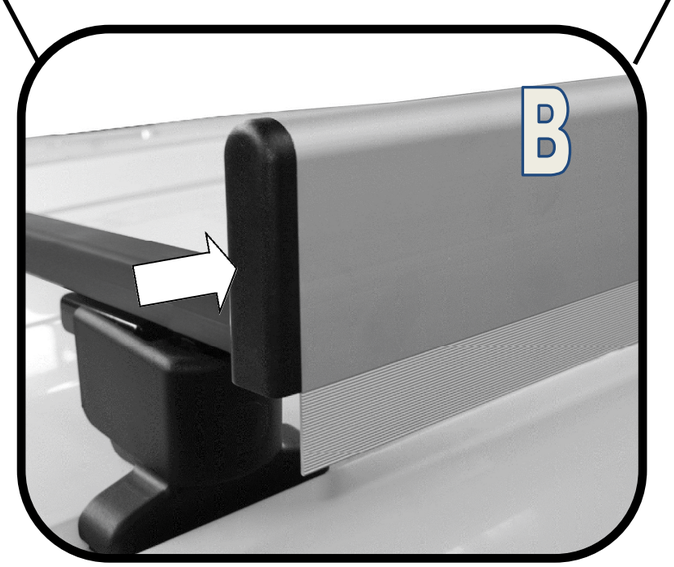

x 2